Pbar Note # 609 **Ralph J. Pasquinelli, 2/10/99**

Measurement of the Debuncher Band 1 Pickup Prototype at LHe Temperature.

The noise performance of the waveguide pickup was carefully measured to understand the effective noise temperature of the system. The measurement test set up is depicted in Figure 1 below. A complete set of measurements was taken both at room temperature and at liquid He temperatures. A reference Miteq amp was also measured at room temperature to monitor the drift of the measurement electronics. Noise performance was monitored at five frequencies across the band of 4-5.2 GHz.

This type of measurement is particularly difficult because of the variation of physical temperature of the system. Figure 2 shows the temperature range for the test tank. Temperatures varied from 8-30 K. As such, a direct calculation of Teff is error ridden because of the variation in Tcold. A better estimation is to take the ratio of the warm noise performance to the cold noise performance. For the warm performance, the Teff of the system is simply the termination temperature plus the added noise of the amplifier. It is easy to measure the warm Teff of the amp. (For this initial test, unfortunately, the warm Teff was not measured but assumed to be 60 K. All remaining amps will be measured warm before final assembly.) Because the dominant noise contribution is due to the termination temperature of 293 K, an error in knowing the Teff of the warm amp does not present a large error in the final calculation. For instance, a change in assumed Teff for the warm amp of 80 K only changes the Teff ratio by 1 K.

A calculation of Teff was also performed in the data presented in Table 1. Note here that some of the Teff temperatures approach the physical temperature of the array. It is known that at cold temperatures, the amplifier provides a significant portion of the total effective temperature, hence making this calculation invalid.

The column Teff ratio is more trustworthy and shows an average and median Teff of approximately 25 K for all installed systems. The original Debuncher cooling system had a Teff of 120-150 K. This number is the addition of the 80 K termination resistance, 10-30 K associated with cable insertion losses, and 30-40 K for the preamp Teff. The new tank has an effective temperature that is about five times improved over the old system. This ratio improvement will translate to an increased system gain and signal to noise ratio.

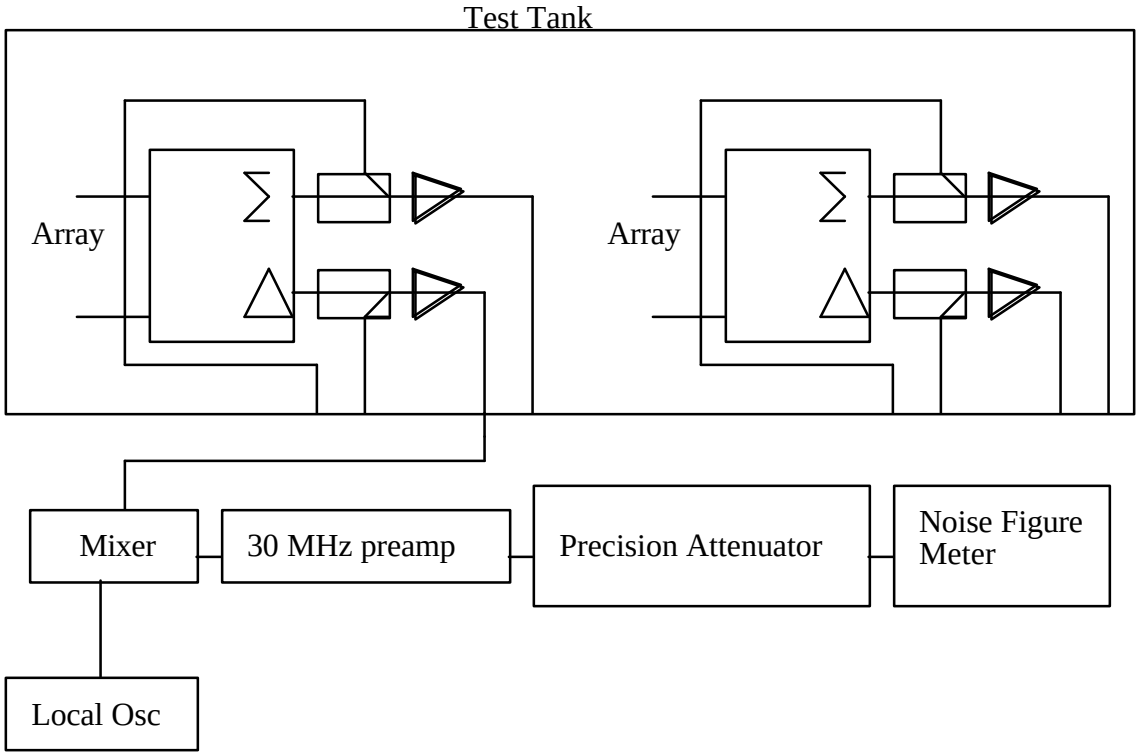

Figure 1. Test setup

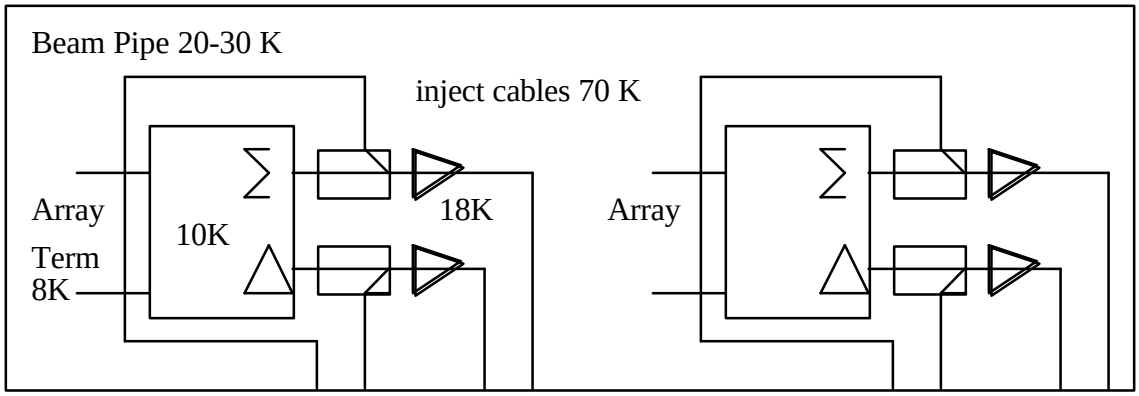

Figure 2. Tank temperature profile

2/5/99

Debuncher prototye Band 1 pickup Noise performance

R.J.. Pasquinelli

Miteq Amp #	Freq. GHz	Warm Att. Setting	Cold Att. Setting	Noise fig. @77K dB	Gain Warm inj to out dB	Gain Cold inj to out dB	Inject to Out Cable Loss Warm dB	Inject to Out Cable Loss Cold dB	Cold Gain Adjustment dB	Adjusted Y factor dB	Cold Noise Figure dB	Cold effective Temp deg K
584533	4.0	20.33	13.10	0.27	7	13.1	4.44	3.19	5.475	12.71	3.65	9
Amp #1	4.3	20.38	13.50	0.22	8	13.9	4.57	3.24	5.235	12.12	4.27	12
	4.6	20.99	13.84	0.26	9	14.7	4.71	3.36	5.025	12.18	4.21	11
	4.9	21.34	14.72	0.30	8.5	14.6	4.97	3.42	5.325	11.95	4.45	13
	5.2	21.36	14.32	0.29	9	14.5	5.04	3.61	4.785	11.83	4.58	13
569614	4.0	20.55	9.03	0.16	8	9.1	4.44	3.19	0.475	12.00	4.40	12
Amp #2	4.3	20.09	9.10	0.20	8	8.8	4.57	3.24	0.135	11.13	5.34	17
	4.6	19.71	9.08	0.24	8	8.6	4.71	3.36	-0.075	10.56	5.96	21
	4.9	19.52	9.08	0.26	7.5	8.4	4.97	3.42	0.125	10.57	5.95	21
	5.2	18.71	8.76	0.32	7	7.8	5.04	3.61	0.085	10.04	6.53	24
584532	4.0	17.00	10.13	0.38	4	9.5	4.44	3.19	4.875	11.75	4.67	14
Amp #3	4.3	17.20	10.39	0.37	4.75	10.2	4.57	3.24	4.785	11.60	4.83	14
	4.6	17.26	10.22	0.40	5.6	10.6	4.71	3.36	4.325	11.37	5.08	16
	4.9	17.20	11.03	0.43	4.5	10.1	4.97	3.42	4.825	11.00	5.48	18
	5.2	16.96	9.55	0.41	4.5	9.8	5.04	3.61	4.585	12.00	4.40	12
584531	4.0	19.88	12.62	0.26	7.5	12.18	4.44	3.19	4.055	11.32	5.13	16
Amp #4	4.3	20.24	11.81	0.17	8	12.8	4.57	3.24	4.135	12.57	3.80	10
	4.6	20.24	14.57	0.25	8.5	13.3	4.71	3.36	4.125	9.80	6.80	26
	4.9	20.25	14.77	0.30	7.5	12.7	4.97	3.42	4.425	9.91	6.68	26
	5.2	19.56	14.45	0.35	7.5	12.3	5.04	3.61	4.085	9.20	7.47	32

593347	4.0	20.70	0.22
Warm Ref Am	4.3	20.98	0.19
	4.6	21.09	0.24
	4.9	20.59	0.25
	5.2	21.36	0.29

T warm =	293
T cold=	7
Excess noise ratio dB=	16.11