REV.	DESCRIPTION	DRAWN / APPD.	DATE / DATE
A	REDRAWN AND REVISED	G.A. JOHNSON W.J. MUELLER	11/13/90 11/28/90
B	ADDED PIN SYNC CHASSIS	G.A. JOHNSON W.J. MUELLER	3/21/91 3/25/91
C	REMOVED FWD INJ. MANUAL TROMBONES & CORRECTED MUX SWITCH POSITIONS	G.A. JOHNSON W.J. MUELLER	7/20/94 7/25/94
D	NAME & CONTROL CHANGES	W.J. MUELLER W.J. MUELLER	
E	ADDED AMPS, COUPLERS, CHANGED 4 THROW TO 2 THROW SWITCH, FIXED PU PLATE	W.J. MUELLER W.J. MUELLER	10/10/01
F	REPLACED SUMMERS WITH HYBRIDS, DELTA OUTPUTS SUMMED THRU AMPS TO SWITCH TREE	W.J. MUELLER W.J. MUELLER	6/23/05
G			

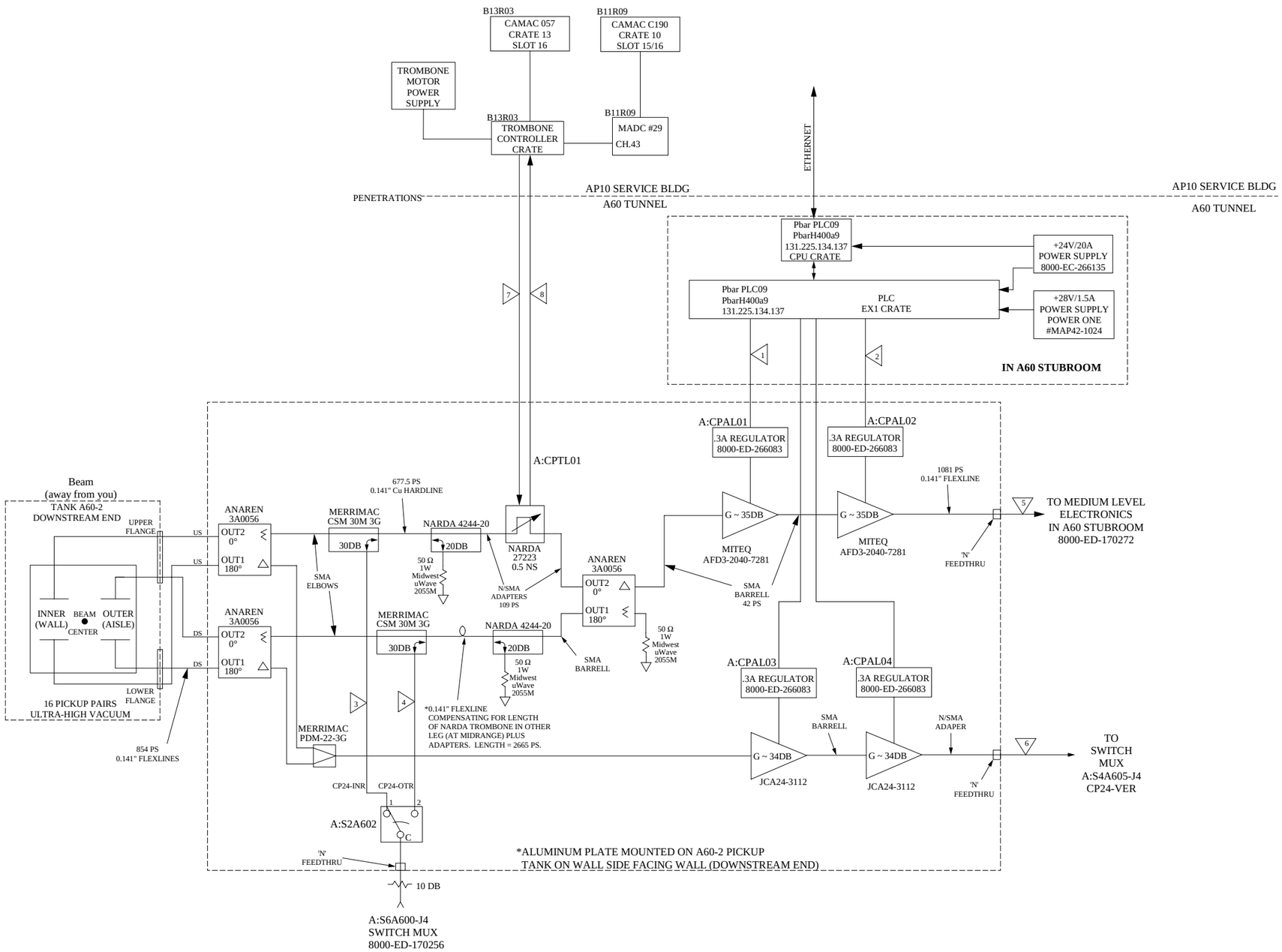

NOTES:

1. AMPLIFIER GAINS ARE NOMINAL.
2. AMP REGULATOR BUS HAS ON/OFF CONTROL, HIGH/LOW VOLTAGE STATUS, AND HIGH/LOW CURRENT STATUS.
3. BOLD LINES INDICATE MAIN SIGNAL PATH
4.

CABLE SCHEDULE

NO.	CABLE NAME	CABLE NO.	SIZE
1	PLC TO REGULATOR	CPAL01	22GA/10C
2	PLC TO REGULATOR	CPAL02	22GA/10C
3	PHASE FWD (UPSTREAM)	S2A602-1	FLEXLINE, 2091PS
4	PHASE FWD (DOWNSTREAM)	S2A602-2	FLEXLINE, 2097PS
5	LL TO ML, TO STUBROOM	CPLMRF	1/2" HELIAX
6	LL TO S4A605 IN A60 STUB		1/2" HELIAX
7	TROMBONE DRIVE	CPTL01 PWR	16GA/2 TPS
8	TROMBONE READBACK	CPTL01 RDBK	22GA/4 TPS
9			
10			
11			
12			
13			
14			

6/23/05

ITEM NO.	PART NO.	DESCRIPTION OR SIZE	QTY. REQ.
PARTS LIST			

UNLESS OTHERWISE SPECIFIED			ORIGINATOR	R.J. PASQUINELLI	7/29/90
FRACTIONS	DECIMALS	ANGLES	DRAWN	WESLEY MUELLER	9/26/96
+/-	+/-	+/-	CHECKED		
			APPROVED		

1. BREAK ALL SHARP EDGES 1/64 MAX.
2. DO NOT SCALE DRAWING
3. DIMENSIONING IN ACCORD WITH ANSI Y14.5 STD'S

MAX. ALL MACHINED SURFACES

USED ON

MATERIAL-

FERMI NATIONAL ACCELERATOR LABORATORY
UNITED STATES DEPARTMENT OF ENERGY

ANTI-PROTON SOURCE
CORE MOMENTUM SYSTEM (2-4 GHZ)
LOW LEVEL ELECTRONICS

SCALE	FILMED	DRAWING NUMBER	REV.
		8000-ED-170271	F