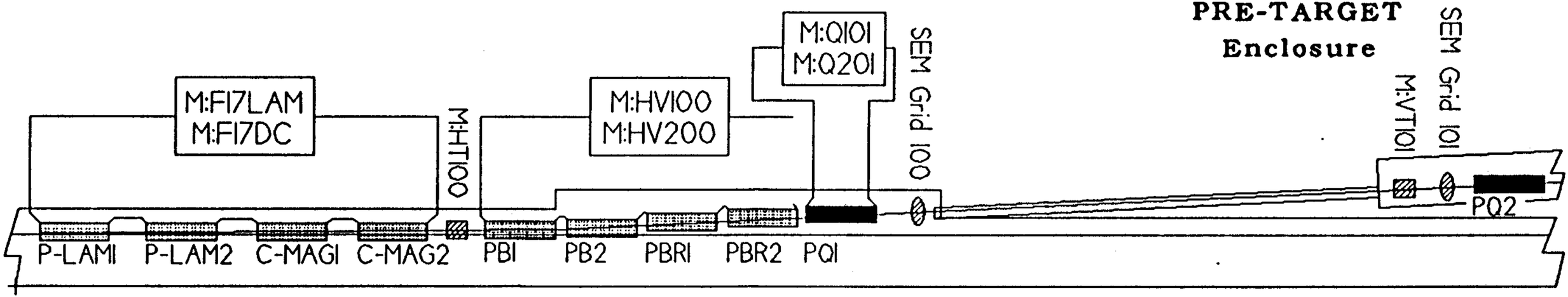

F-18 Enclosure

S. Anderson 7/9