REV.	DESCRIPTION	DRAWN / APPD.	DATE / DATE
A	REDRAWN IN CAD	D.HAUSER / M.REICH	9/11/98 / 9/96
B	CHANGED LENGTH & DIA.	SCHMITZ / LEE	1/98

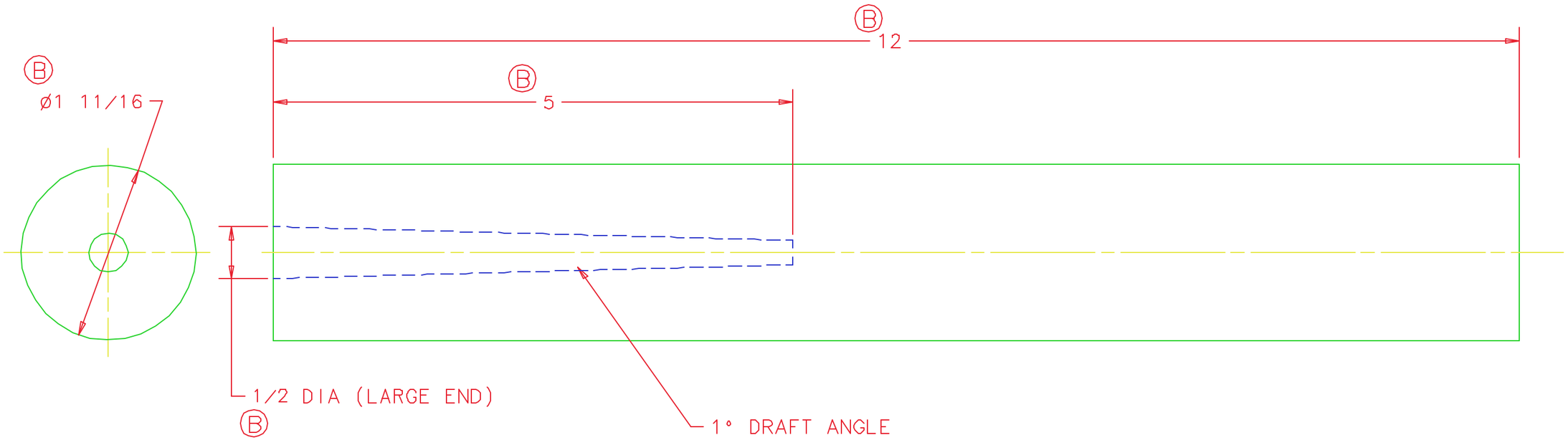

NOTICE: IMAGE OBTAINED FROM FERMILAB WEB SITE

This information is provided for REFERENCE use only.
Not for MANUFACTURE, or DESIGN INFORMATION.
All information contained in this document represents work sponsored by an agency of the U.S. Government.
Neither the U.S. Government nor any agency thereof, nor Universities Research Association, Inc., nor any of their employees or officers, makes any warranty, express or implied, or assumes any legal liability or responsibility for the accuracy, completeness, or usefulness of any information, apparatus, product or process disclosed, or represents that its use would not infringe privately owned rights.

ITEM	PART NO.	DESCRIPTION OR SIZE	QTY.
PARTS LIST			

UNLESS OTHERWISE SPECIFIED			ORIGINATOR		
FRACTIONS	DECIMALS	ANGLES	DRAWN	S.L.MEREDITH	11/14/83
± 1/64	± .010	±1/2°	CHECKED	G BIALLAS	12/7/83
			APPROVED		

1. BREAK ALL SHARP EDGES 1/64 MAX
2. DO NOT SCALE DRAWING.
3. DIMENSIONS BASED UPON ANSI Y14.5M-1982
4. MAX ALL MACH SURFACES √

USED ON

MATERIAL: LITHIUM 7

FERMI NATIONAL ACCELERATOR LABORATORY
UNITED STATES DEPARTMENT OF ENERGY

ANTI-PROTON SOURCE
LITHIUM LENS
LITHIUM FILLER SLUG

SCALE	FILMED	DRAWING NUMBER	REV
FULL		8000-MB-170085	B

CADFILE: 170085a.dwg | CREATED WITH I-DEAS_V1 | USER NAME: DHAUSER