FERMILAB ENGINEERING NOTE

SECTION	PROJECT	SERIAL-CATEGORY	PAGE
			1

SUBJECT: DRF1 NEW 3CPX19000 TUBES

NAME: R.J. Pasquinelli

DATE: 5/18/88

REVISION DATE:

SYSTEM PARAMETERS

CAVITY Q = 9000

GAP IMPEDANCE = $1.8 \times 10^6 \Omega$

MAX V_{0-P} New Tubes = $1.2 \times 10^6 V_{0-P}$

PULSE DURATION = 400 μsec

REPETITION RATE = 1.5 SEC

RESONANT FREQ = 53.103 MHz

TUBE BIAS = -160V

TUBE IDLE CURRENT < 5mA

CAP BANK VALUE = 15μF

CAP BANK ENERGY @ 14KV = 1.47KJ

PEAK POWER

$$P_{PK} = \frac{V_{gap}^2}{R_{GAP}} = \frac{[1.2 \times 10^6]^2}{1.8 \times 10^6 \Omega} = 800 \text{ kW}_{PK}$$

$$\text{DUTY CYCLE} = \frac{400 \times 10^{-6}}{1.5} = 2.66 \times 10^{-4}$$

$$P_{RMS} = \frac{\left[\frac{1.2 \times 10^6}{\sqrt{2}}\right]^2}{1.8 \times 10^6} = 400 \text{ kW}_{RMS}$$

$$\text{AVERAGE POWER} = R_{MS} \times \text{DUTYCYCLE} = [400 \times 10^3][2.66 \times 10^{-4}]$$

$$= 106 \text{ WATTS}$$

shared between 2 TUBES

FERMILAB
ENGINEERING NOTE

SECTION	PROJECT	SERIAL-CATEGORY	PAGE
			2

SUBJECT: DRFI New 3CPX10000 TUBES

NAME: R. J. Pasquinelli

DATE: 5/18/88

REVISION DATE:

Final Amp Gain vs Anode Voltage

Driver Power held constant @ 24 Kwatts

Anode Volts	Gap Vop	Power in Gap Z = $1.8\times10^6\Omega$ RMS during pulse	Gain
10 kv	840 kv	196 kw	9.1 dB
11 kv	940 kv	245 kw	10.1 dB
12 kv	1.02 mv	289 kw	10.9 dB
13 kv	1.12 mv	348 kw	11.6 dB
13.7 kv	1.24 mv	427 kw	12.5 dB

Anode Voltage Swing vs Anode Volts Push Pull

Anode Z ≈ 200Ω Gap Z = $1.8\times10^6\Omega$ Q = 9000

assuming small losses due to high Q the voltage transformation from gap to anode is the square root of the impedance Ratio $\sqrt{\frac{1.8mv}{200\Omega}} \cong 95$

Anode Volts	Anode Swing
10 kv	8.85 kv
11 kv	9.89 kv
12 kv	10.7 kv
13 kv	11.8 kv
13.7 kv	13.0 kv

FERMILAB ENGINEERING NOTE	SECTION	PROJECT	SERIAL-CATEGORY	PAGE 3
SUBJECT: DRFI New 3CPX 10000 TUBES			NAME: R.J. Pasquinelli	
			DATE: 5/18/88	REVISION DATE

STORED ENERGY & MAX CURRENT in TUBE

ANODE VOLTAGE = 13.7 KV

$$Q = \frac{R}{\omega L}$$

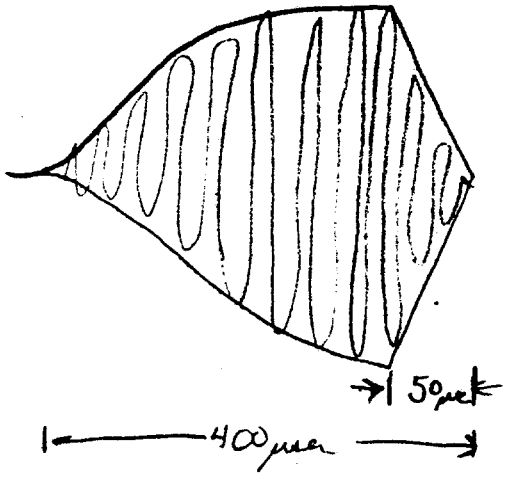

@ RESONANCE $\omega L = \frac{1}{\omega C}$

$$\omega L = \frac{1}{\omega C} = \frac{R}{Q} = \frac{1.8\times10^6}{9000}$$

$$= 200$$

$$\omega = 2\pi \times 53\times10^6$$

$$C = \frac{Q}{\omega R} = \frac{1}{(2\pi 53\times10^6)(200)} = 15\ pf$$

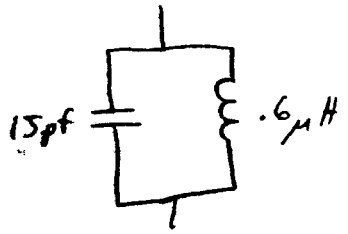

EQUIVALENT CIRCUIT

$$L = \frac{R}{\omega Q} = \frac{200}{2\pi 53\times10^6} = 0.6\ \mu H$$

$$\frac{1}{\sqrt{LC}} = \omega = \frac{1}{\sqrt{(.6\times10^{-6})(15\times10^{-12})}} = 3.33\times10^8\ \text{RAD/SEC}$$

$$= 53\times10^6\ Hz$$

STORED ENERGY in CAP on ONE HALF CYCLE

$$\frac{1}{2} C V_{CAP}^2 = \frac{1}{2}(15\times10^{-12})(1.2\times10^6 v)^2$$

$$= 10.8\ \text{JOULES}$$

IF GAP IS DRIVEN DOWN IN 50×10^{-6} SEC

$$\frac{10.8\ \text{WATT SEC}}{50\times10^{-6}\ \text{SEC}} = 216\ kw = I_{ANODE}^2\ R_{ANODE}$$

$$I_{ANODE} = \sqrt{\frac{216\ kw}{200\Omega}} \cong 33\ \text{AMPS}$$

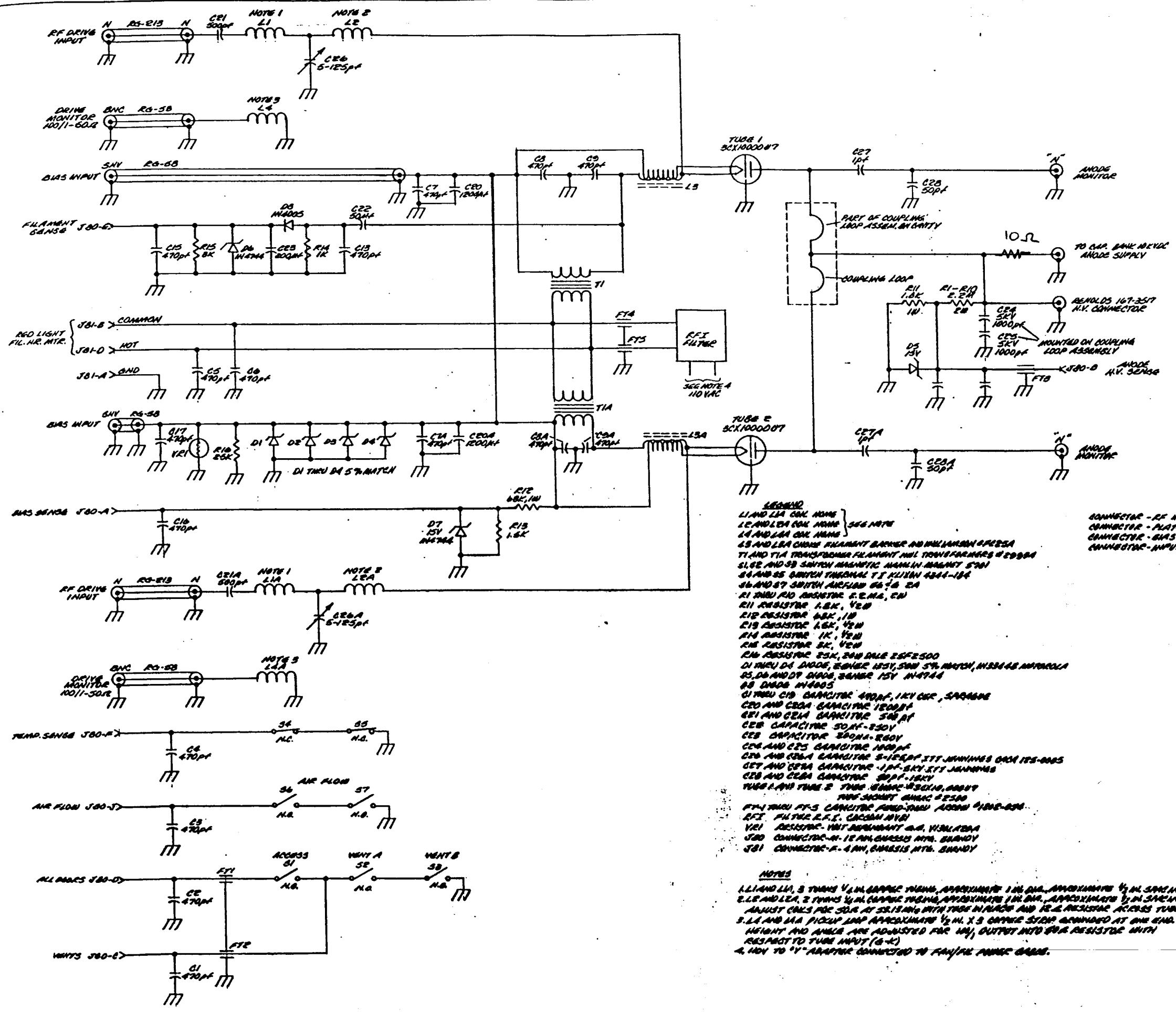

REV.	DESCRIPTION	DRAWN	DATE
		APPD.	DATE

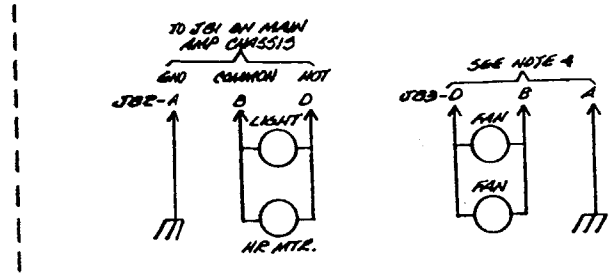

FILTER MOUNT ASSEMBLY
#8030-MC-216362

LEGEND
FAN MOTOR PA #76808
METER-FILAMENT HOUR, CRAMER CONTRC 6356
LIGHT, RED PILOT LIGHT MV-40
LIGHT, BULB 100V, ESN BAYONETT WESTINGHOUSE ESTADC
J82 AND J83 CONNECTOR 4 PIN, TRIM 7250 BUNDY

LEGEND
L1 AND L1A COIL NOTE
L2 AND L2A COIL NOTE } SEE NOTE
L4 AND L4A COIL NOTE
S3 AND S3A CHOKE FILAMENT BARKER AND WILLIAMSON #F2B3A
T1 AND T1A TRANSFORMER FILAMENT MIL TRANSFORMERS #E0984
S1, S2 AND S3 SWITCH MAGNETIC MANN LIN MAGNET 5701
S4 AND S5 SWITCH THERMAL T.I. KLIXON 4344-184
S6 AND S7 SWITCH AIRFLOW 66-6 2A
R1 THRU R10 RESISTOR 2.2MΩ, 2W
R11 RESISTOR 1.8K, ½W
R12 RESISTOR 68K, 1W
R13 RESISTOR 1.5K, ½W
R14 RESISTOR 1K, ½W
R15 RESISTOR 8K, ½W
R16 RESISTOR 25K, 20W DALE 25FF500
D1 THRU D4 DIODE, ZENER 15V, 5W 5% MATCH, IN3944B MOTOROLA
D5, D6 AND D7 DIODE, ZENER 15V IN4744
D8 DIODE IN4005
C1 THRU C19 CAPACITOR 470pf, 1KV CER, SPRAGUE
C20 AND C20A CAPACITOR 1200pf
C21 AND C21A CAPACITOR 500pf
C22 CAPACITOR 50μf-250V
C23 CAPACITOR 20μf-250V
C24 AND C25 CAPACITOR 1000pf
C26 AND C26A CAPACITOR 5-125pf STT JOHNSONS 0404 125-0005
C27 AND C27A CAPACITOR 1pf-5KV STT JOHNSONS
C28 AND C28A CAPACITOR 50pf-1KV
TUBE 1 AND TUBE 2 TUBE EIMAC #3CX10, 000A7
TUBE SOCKET EIMAC #2S20
FT-1 THRU FT-5 CAPACITOR FEED-THRU ACCOM #1806-034
RFI FILTER R.F.I. CACCOM MV81
V21 RESISTOR-VOLT REGULATOR 0-A, V130LA20A
J80 CONNECTOR-M-12 PIN, CHASSIS MTG. BUNDY
J81 CONNECTOR-F-4 PIN, CHASSIS MTG. BUNDY

NOTES
1. L1 AND L1A, 3 TURNS ¼ IN. COPPER TUBING, APPROXIMATE 1 IN. DIA., APPROXIMATE ½ IN. SPACING.
2. L2 AND L2A, 2 TURNS ¼ IN. COPPER TUBING, APPROXIMATE 1 IN. DIA., APPROXIMATE ½ IN. SPACING.
ADJUST COILS FOR 50Ω AT 53.13 MHz WITH TUBE IN PLACE AND R2 & R2A RESISTOR ACROSS TUBE INPUT.
3. L4 AND L4A PICKUP LOOP APPROXIMATE ½ IN. X 3 COPPER STRIP GROUNDED AT ONE END.
HEIGHT AND ANGLE ARE ADJUSTED FOR 1Ω, OUTPUT INTO 50Ω RESISTOR WITH RESPECT TO TUBE INPUT (G-K)
4. HOT TO "V" ADAPTOR CONNECTED TO FAN/LIL POWER BARS.

CONNECTOR - RF INPUT "N"
CONNECTOR - PLATE MONITOR "N"
CONNECTOR - BIAS INPUT - SHV
CONNECTOR - INPUT MONITOR - BNC

ITEM NO.	PART NO.	DESCRIPTION OR SIZE	QTY. REQ.
		PARTS LIST	

UNLESS OTHERWISE SPECIFIED			ORIGINATOR	A. MORETTI	6-6-86
FRACTIONS	DECIMALS	ANGLES	DRAWN	[illegible]	7-16
±	±	±	CHECKED	[illegible]	3-31-88
1. BREAK ALL SHARP EDGES 1/64 MAX.			APPROVED	[illegible]	3-31-88
2. DO NOT SCALE DWG.			USED ON		
3. DIMENSIONING IN ACCORD WITH ANSI Y14.5 STD'S.			MATERIAL		
MAX. ALL MACHINED SURFACES					

FERMI NATIONAL ACCELERATOR LABORATORY
UNITED STATES DEPARTMENT OF ENERGY

P-BAR
DRF-1 THRU 8 DEBUNCHER CAVITY PWR. AMPLIF.
SCHEMATIC

SCALE	FILMED	DRAWING NUMBER	REV.
	1-11-88	8000-ED-119522	

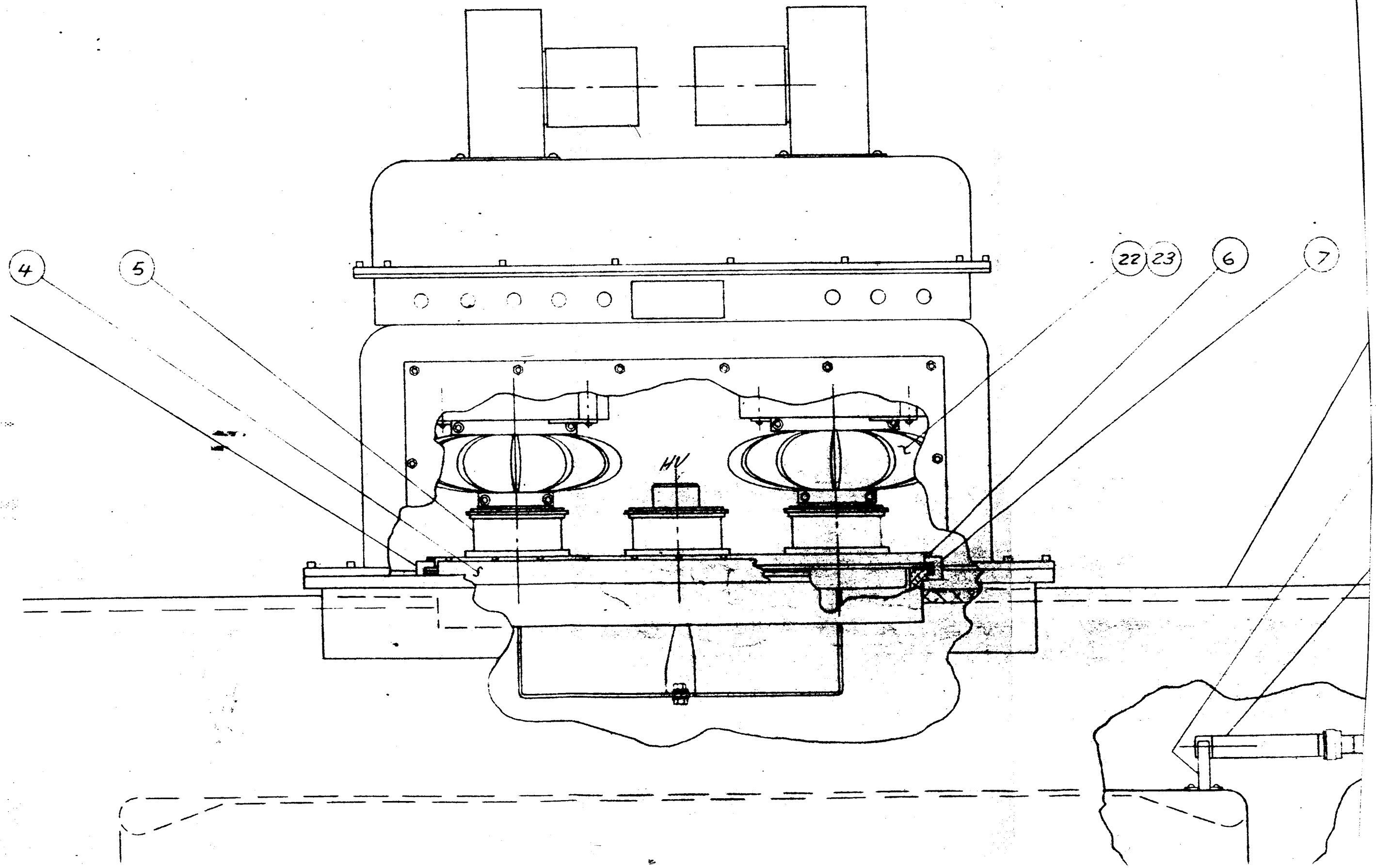
4
5
22
23
6
7
HV