Fermilab

$\bar{p}$ NOTE #447

Temperature Compensation of Coax Cables

R. Pasquinelli

1/28/86

RJP 1/28/86

TEMPERATURE COMPENSATION OF COAX CABLES

When timing requirements are stringent in a microwave system, temperature compensation of long transmission lines is a must. In the case of stochastic cooling systems for the $\bar{p}$ SOURCE timing must be kept constant to better than ± 10ps from pickup to Kicker.

Typical delays are on the order of 800ns most of which is coaxial transmission line. On such long lines, a few °C change in temperature may result in tens of picoseconds of time delay change.

Because the transmission lines are stretched out over long distances a distributed thermometer is necessary. The thermometer chosen was #22 gauge copper wire stretched along the length of the coax. Copper has a resistivity temp coefficient of 3900 PPM/°C.

Figure 1 shows a typical cooling system installation. A motorized trombone line is in series with each coax to be compensated.

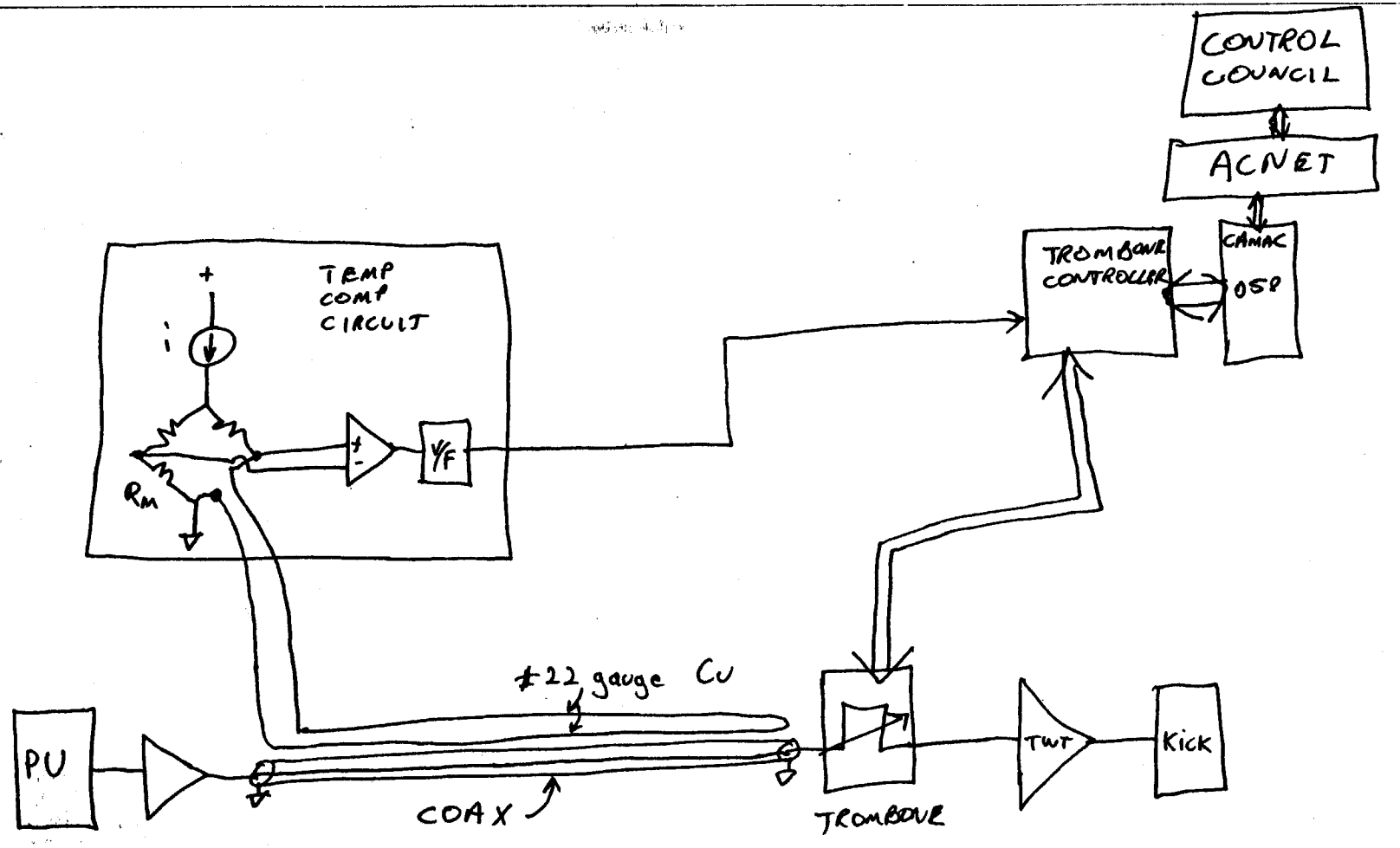

FIGURE 1

Typical Stochastic Cooling Temperature Compensation Loop

The Circuit chosen (APPENDIX) converts change in Cu wire resistance to a variable frequency pulse train which is counted by the trombone controller. The bridge circuit accepts the 3-16 Ω copper wire variation with minimal adjustment sensitivity. The circuit is linear to approximately 2% over a ±20°C temperature range.

With the appropriate "fudge" factor the trombone driver can move the trombone line in the correct direction to compensate for any group delay change. What follows is the technique for calculating this fudge factor. Note that it will be different for each type and length of coax.

All the necessary constants are available in the Appendix. They include: coax cable type and temp coefficients, copper wire data, cable β (velocity), trombone transfer function. Variables that need to be measured are resistance of copper wire thermometer, length of coax, temperature of tunnel at time of installation. The transfer function of the circuit must be calculated. At installation the V/F output is adjusted to 75KHz. Temperature variation will force the V/F from 50KHz to 100KHz giving good count resolution to the trombone controller.

The appendix also contains oven test results and stability test results for the V/F circuit. Over Temp range tested frequency output is stable to 0.33%. Long term stability (3 week Test) approximately 0.4%

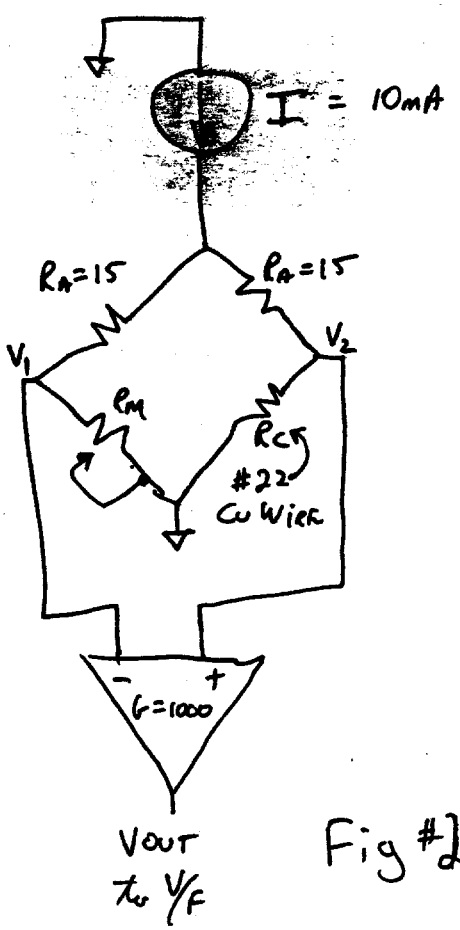

Fig #2

for Figure 2 at left the following equations can be solved

$$V_{OUT} = 1000\, I \left[\frac{R_A (R_C - R_M)}{2R_A + R_M + R_C} \right] \quad (1)$$

for the purpose of calculating R_M with specified V_{OUT}

$$R_M = \frac{1000\, I\, R_A R_C - V_{OUT}(2R_A + R_C)}{V_{OUT} + 1000\, I\, R_A} \quad (2)$$

The above equations will be required in the sample calculation that follows.

SAMPLE CALCULATION OF FUDGE FACTOR

GIVEN:

β of COAX		88% C
Length of coax		100 METERS
TYPE COAX		7/8" FOAM
TEMP COEF of COAX @ 80°F/26.6°C		-6PPM/°F -9.64PPM/°C
LENGTH OF #22 COPPER WIRE		200 meters
Temp COEF OF COPPER		.0039/°C
TROMBONE COEFFICIENTS	0.5NS	7.25 STEPS/PICOSECOND
	1.5NS	5.9 STEPS/PICOSECOND
RESISTANCE OF Cu WIRE @ 80°F (should be measured)		10.83Ω
V_{OUT} to V/F OUTPUT		10KHz/V

① Solve TRANSFER FUNCTION GAIN for V/F

Initial f_{OUT} = 75KHz → V_{OUT1} = 7.5V

from equation 2 solve for R_M

$$R_M = \frac{(1000)(.01)(15)(10.83) - 7.5(2.15 + 10.83)}{7.5 + 1000(.01)(15}$$

$$= 8.37\Omega$$

Figure V_{OUT} change for 1°C temp Rise

$$\Delta R_c = (10.83\,\Omega)(.0039/°C)(1°C)$$

$$= 0.042\,\Omega$$

recalculate V_{OUT} using equation 1

$R_c = 10.83 + .042 = 10.872$

$$V_{OUT2} = 1000\,(.01)\left[\frac{15\,(10.872 - 8.37)}{2.15 + 8.37 + 10.872}\right]$$

$$= 7.62\,V \longrightarrow 76.2\,kHz$$

$$\frac{V_{OUT2} - V_{OUT1}}{°C} = 7.62 - 7.5 = 0.12\,V/°C$$

$$= 1.2\,kHz/°C$$

① $\boxed{+1°C \text{ Temp change} \rightarrow +1.2\,kHz}$

② Figure CABLE GROUP DELAY CHANGE VS TEMP

$$\Delta t_g/°C = \left(\frac{100 \text{ meters}}{.88 \times 3 \times 10^8\ m/sec}\right)\left(-9.64 \times 10^{-6}/°C\right)$$

② $\boxed{\Delta t_g/°C = -3.65 \times 10^{-12}\ sec/°C}$

③ Divide ② by ①

$$\frac{-3.65 \times 10^{-12}\ \text{SEC}/^{\circ}\text{C}}{1.2 \times 10^{3}\ \text{Hz}/^{\circ}\text{C}} = -3.04 \times 10^{-15}\ \frac{\text{SEC}}{\text{Hz}}\ (\text{VF})$$

$$= -3.04 \times 10^{-12}\ \text{SEC}/\text{KHz}$$

④

If the 0.5 NS TROMBONE LINE is used to compensate the coax then

$$\text{FUDGE FACTOR} = \left(-3.04 \times 10^{-12}\ \frac{\text{SEC}}{\text{KHz}}\right)\left(\frac{5.9\ \text{STEPS}}{10^{-12}\ \text{SEC}}\right)$$

$$\boxed{\text{FUDGE FACTOR} = -17.9\ \frac{\text{STEPS}}{\text{KHz}}}$$

NOTE as Temp increases cable gets shorter thus trombone must get LONGER TO COMPENSATE. Close attention must be paid to sign. This factor can be down loaded to the 058 MODULE via the control system.

APPENDIX

Table 4. Working Table, Standard Annealed Copper Wire, Solid
[American Wire Gage (B & S)]

Gage no.	Diam, mils	Cross section		Ω per 1,000 ft		Ω/mi at 25°C (=77°F)	Weight per 1,000 ft, lb
		cir mils	in²	25°C (=77°F)	65°C (=149°F)		
0000	460.0	212,000	0.166	0.0500	0.0577	0.264	641.0
000	410.0	168,000	0.132	0.0630	0.0727	0.333	508.0
00	365.0	133,000	0.105	0.0795	0.0917	0.420	403.0
0	325.0	106,000	0.0829	0.100	0.116	0.528	319.0
1	289.0	83,700	0.0657	0.126	0.146	0.665	253.0
2	258.0	66,400	0.0521	0.159	0.184	0.839	201.0
3	229.0	52,600	0.0413	0.201	0.232	1.061	159.0
4	204.0	41,700	0.0328	0.253	0.292	1.335	126.0
5	182.0	33,100	0.0260	0.319	0.369	1.685	100.0
6	162.0	26,300	0.0206	0.403	0.465	2.13	79.5
7	144.0	20,800	0.0164	0.500	0.586	2.68	63.0
8	128.0	16,500	0.0130	0.641	0.739	3.38	50.0
9	114.0	13,100	0.0103	0.808	0.932	4.27	39.6
10	102.0	10,400	0.00815	1.02	1.18	5.38	31.4
11	91.0	8,230	0.00647	1.28	1.48	6.75	24.9
12	81.0	6,530	0.00513	1.62	1.87	8.55	19.8
13	72.0	5,180	0.00407	2.04	2.36	10.77	15.7
14	64.0	4,110	0.00323	2.58	2.97	13.62	12.4
15	57.0	3,260	0.00256	3.25	3.75	17.16	9.86
16	51.0	2,580	0.00203	4.09	4.73	21.6	7.82
17	45.0	2,050	0.00161	5.16	5.96	27.2	6.20
18	40.0	1,620	0.00128	6.51	7.51	34.4	4.92
19	36.0	1,290	0.00101	8.21	9.48	43.3	3.90
20	32.0	1,020	0.000802	10.4	11.9	54.9	3.09
21	28.5	810	0.000636	13.1	15.1	69.1	2.45
22	25.3	642	0.000505	16.5	19.0	87.1	1.94
23	22.6	509	0.000400	20.8	24.0	109.8	1.54
24	20.1	404	0.000317	26.2	30.2	138.3	1.22
25	17.9	320	0.000252	33.0	38.1	174.1	0.970
26	15.9	254	0.000200	41.6	48.0	220	0.769
27	14.2	202	0.000158	52.5	60.6	277	0.610
28	12.6	160	0.000126	66.2	76.4	350	0.484
29	11.3	127	0.0000995	83.4	96.3	440	0.384
30	10.0	101	0.0000789	105	121	554	0.304
31	8.9	79.7	0.0000626	133	153	702	0.241
32	8.0	63.2	0.0000496	167	193	882	0.191
33	7.1	50.1	0.0000394	211	243	1,114	0.152
34	6.3	39.8	0.0000312	266	307	1,404	0.120
35	5.6	31.5	0.0000248	335	387	1,769	0.0954
36	5.0	25.0	0.0000196	423	488	2,230	0.0757
37	4.5	19.8	0.0000156	533	616	2,810	0.0600
38	4.0	15.7	0.0000123	673	776	3,550	0.0476
39	3.5	12.5	0.0000098	848	979	4,480	0.0377
40	3.1	9.9	0.0000078	1,070	1,230	5,650	0.0200

Lay Cables In order to obtain sufficient flexibility, wires larger than 0000 are stranded, and they are designated by their conductor; the number of strands in each succeeding layer increases by 6. The number of strands that can thus be layed

TROMBONE TRANSFER FUNCTION

0.5 NS TROMBONE 7.25 STEPS / PICOSECOND

1.5 NS TROMBONE 5.9 STEPS / PICOSECOND

Cablewave Systems
60 Dodge Avenue, North Haven, Connecticut 06473
Tel: 203-239-3311 • TWX: 710-465-0244 • Telex: 6813343

Cablewave Systems

August 9, 1984

Fermilab
Attn: Ralph Pasquinelli
P.O. Box 500
Mailstation 341
Batevia, Ill. 60510

Dear Ralph,

The following tables show you the phase temperature characteristic of our low loss foam cables. At that time when we tested the 7/8 cable, we had no freezer available. Therefore those data start at 80°F.

½"
FLC 12-50

ϑ (°F)	Δ (ppm/°F)
32	-1.25
55	- 3.7
80	- 7.2
100	- 9.4
120	

7/8"
FLC 78-50

ϑ (°F)	Δ (ppm/°F)
80	-6.0
90	-6.5
100	-6.8
110	-8.6
120	

1 5/8"
FLC 158-50

ϑ (°F)	Δ (ppm/°F)
20	5.1
40	2.2
60	-1.7
80	-5.5
100	

I hope this information will help you.

"+" CABLE GETS LONGER

"−" CABLE GETS SHORTER

Regards,

Udo Bode

Udo Bode

dsb

β for all types above = 0.88c

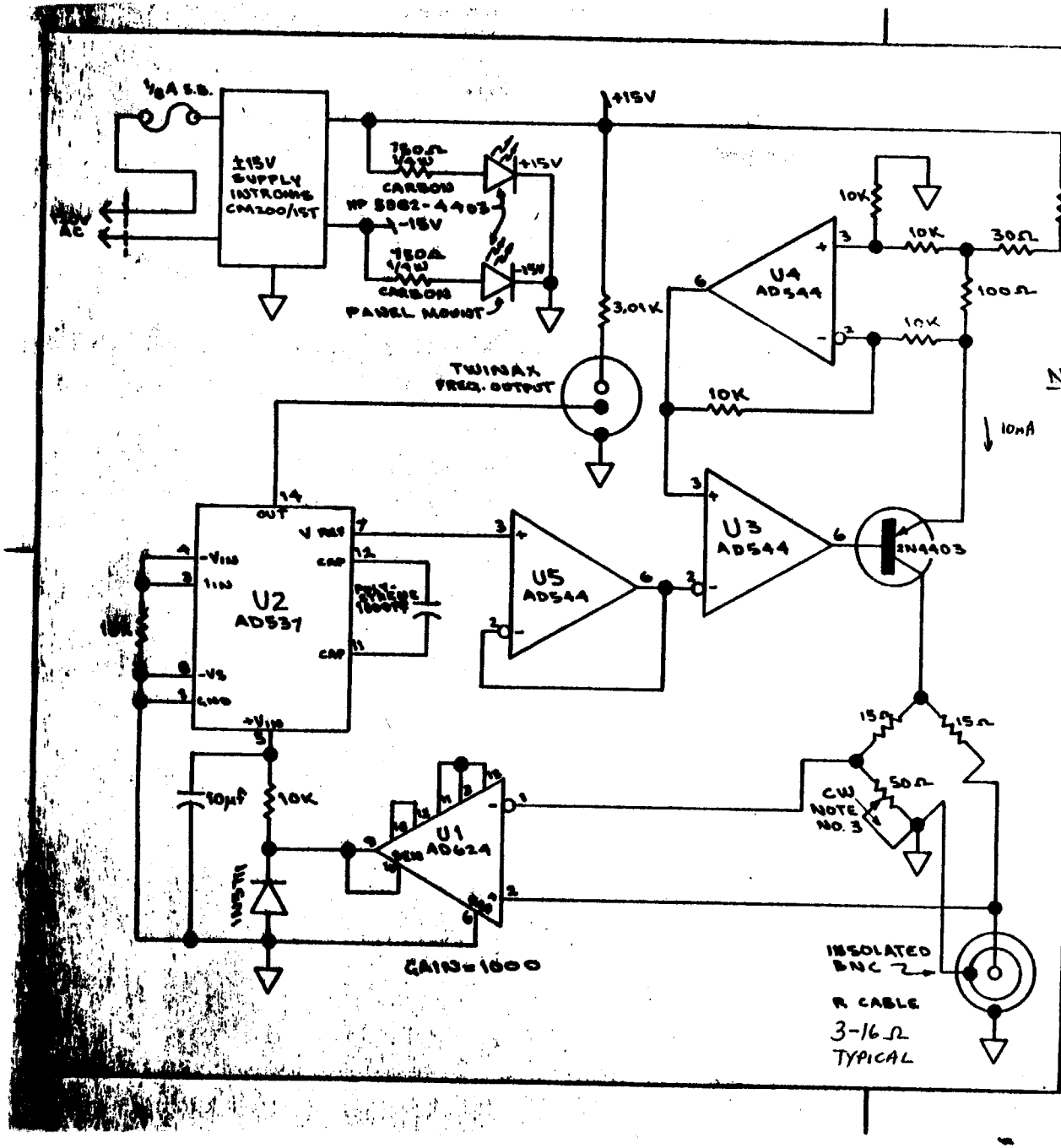

REV	DESCRIPTION	DRAWN / APPD	DATE / DATE

POWER SCHEDULE

I/C	+15V	-15V
U1 = AD624	8	7
U2 = AD537	13	—
U3,U4,U5 = AD544	7	4

NOTE(S):

1. ALL RESISTORS 1/8W METAL FILM UNLESS NOTED.
2. ALL SUPPLIES DECOUPLED WITH .1 μf CAP'S.
3. SPECTROL MODEL NO. 50-3-11-50 WIREWOUND TRIMMER 50 PPM TEMPCO.

ITEM NO.	PART NO.	DESCRIPTION OR SIZE	QTY. REQ.

PARTS LIST

UNLESS OTHERWISE SPECIFIED					
FRACTIONS	DECIMALS	ANGLES	ORIGINATOR	R. J. PASQUINELLI	8-84
±	±	±	DRAWN	Tom Monti	11-28-84
			CHECKED		
			APPROVED		

1. BREAK ALL SHARP EDGES 1/64 MAX.
2. DO NOT SCALE DWG.
3. DIMENSIONING IN ACCORD WITH ANSI Y14.5 STD's.

MAX. ALL MACHINED SURFACES

USED ON

MATERIAL-

FERMI NATIONAL ACCELERATOR LABORATORY
UNITED STATES DEPARTMENT OF ENERGY

ANTI-PROTON SOURCE COAX. TEMPERATURE MONITOR

SCALE	FILMED	DRAWING NUMBER	REV.
		8000-EB-208839	

TIME	FREQ	TEMP °C.
11:15	78.03 kHz	25.68
11:23	78.12 kHz	30.24
11:27	78.130 kHz	35.06
11:30	78.168 kHz	40.48
11:32	78.176 kHz	45.35
11:35	78:209 kHz	50.30
11:45	78.166	52.17
12:30	78.265	55.15
12:45	78.271	55.33
13:10	78.283	55.72
13:40	78.304	56.15
	78.265	50
	78.260	45
	78.247	40
	78.234	36
	78.210	30

V/F OVEN TEST

Fixed Metal Film resistor outside oven

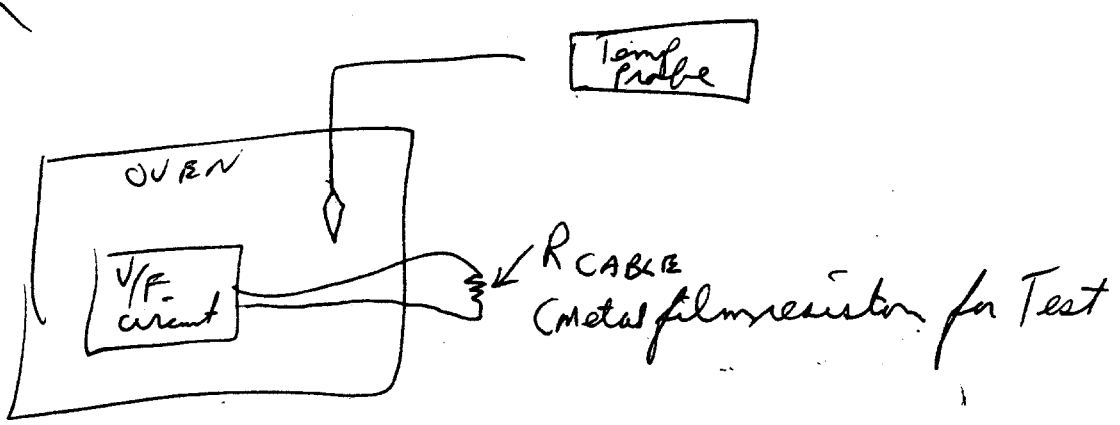

DATE	TIME	FREQ.
2 AUG	1710	77.880 kHz
3 AUG	0630	77.724 kHz
"	0920	77.822 kHz
"	1400	77.844 kHz
"	1530	77.782 kHz
6 AUG	0600	77.712 kHz
6 AUG	0930	77.808 kHz
"	1700	77.865 kHz
7 AUG	0600	77.735 kHz
7 AUG	16:50	77.843 kHz
8 AUG	0600	77.735 kHz
"	0930	77.738 kHz
CHANGED DRIVE CIRCUIT		
8 AUG	1200	77.630 kHz
"	1715	77.580 kHz
AUG	0600	77.558 kHz
"	1030	77.650 kHz
"	1700	77.580 kHz
10 AUG	0700	77.570 kHz
"	1545	77.650 kHz
14 AUG	0600	77.623 kHz
16 AUG	1600	77.680 kHz
17 AUG	1620	77.637 kHz
20 AUG	1500	77.635 kHz
21 AUG	1600	77.612 kHz

V/F Drift Test @ Room Temp