Fermilab

PBAR #434

ACCUMULATOR EXTRACTION VACUUM ANALYSIS

J. SATTI

OCTOBER 30, 1984

FERMILAB ENGINEERING NOTE	SECTION	PROJECT	SERIAL-CATEGORY	PAGE
	OC	TEV I		1/4

SUBJECT	NAME	DATE	REVISION DATE
ACCUMULATOR EXTRACTION VACUUM ANALYSIS	JOHN SATTI	10-30-84	

ACCUMULATOR AT LAMBERSTON EXTRATION

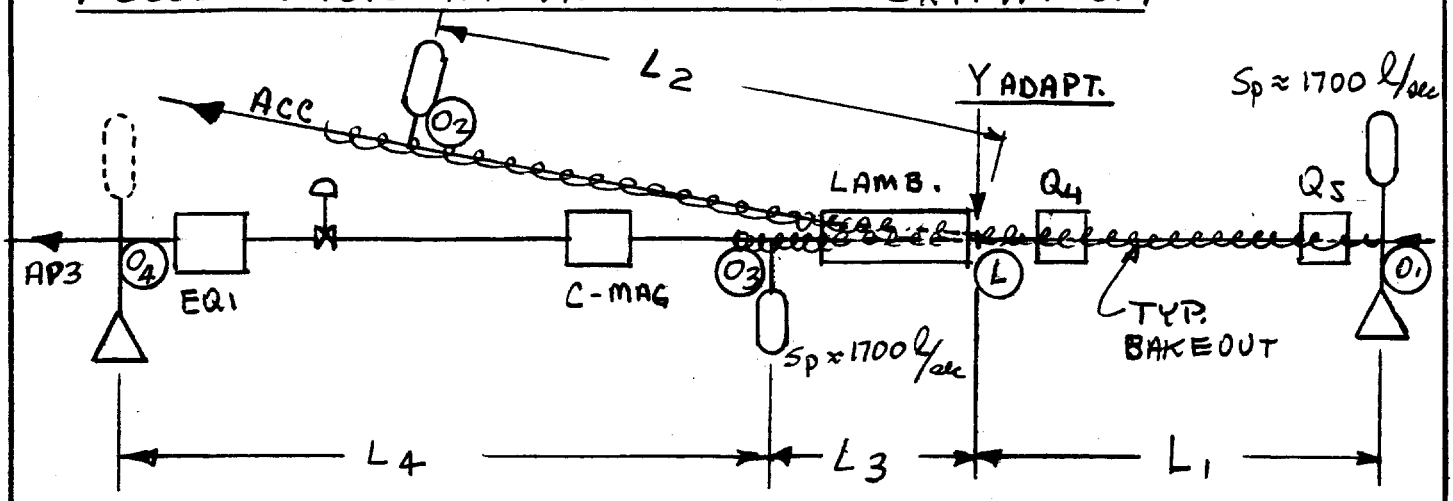

THE FOLLOWING IS REQUIRED:

1. AREAS L_1, L_2 AND L_3 IN-SITU BAKE AT 300°C TO GIVE OUTGASSING RATE OF $q_D = 1 \times 10^{-13}$ TORR L/SEC cm²

2. SUBLIMATION PUMP REQUIRED BETWEEN THE LAMBERSTON AND "C"-MAGNET

3. PROVISION (FLANGE) AT ION PUMP (AT EQ1) FOR POSSIBLE SUBLIMATION PUMP IN FUTURE.

PRESSURES CALCULATIONS

$P_L - P_{O_1} = 3.4 \times 10^{-11}$ TORR

$P_L - P_{O_2} = 8.3 \times 10^{-11}$ TORR

$P_L - P_{O_3} = 2.3 \times 10^{-11}$ TORR

WITH $S_p \approx 1700$ L/sec
$q_D = 1 \times 10^{-13}$ TORR L/sec cm²

$P_{L_{AV}} = 4.7 \times 10^{-11}$ TORR

FERMILAB
ENGINEERING NOTE

SECTION	PROJECT	SERIAL-CATEGORY	PAGE
			4/4

SUBJECT: ACCUMULATOR EXTRACTION VACUUM ANALYSIS

NAME: JOHN A. SATTI

DATE: 10-31-84 REVISION DATE:

AP-3 TRANSFER LINE DOWNSTREAM OF LAMBERSTON

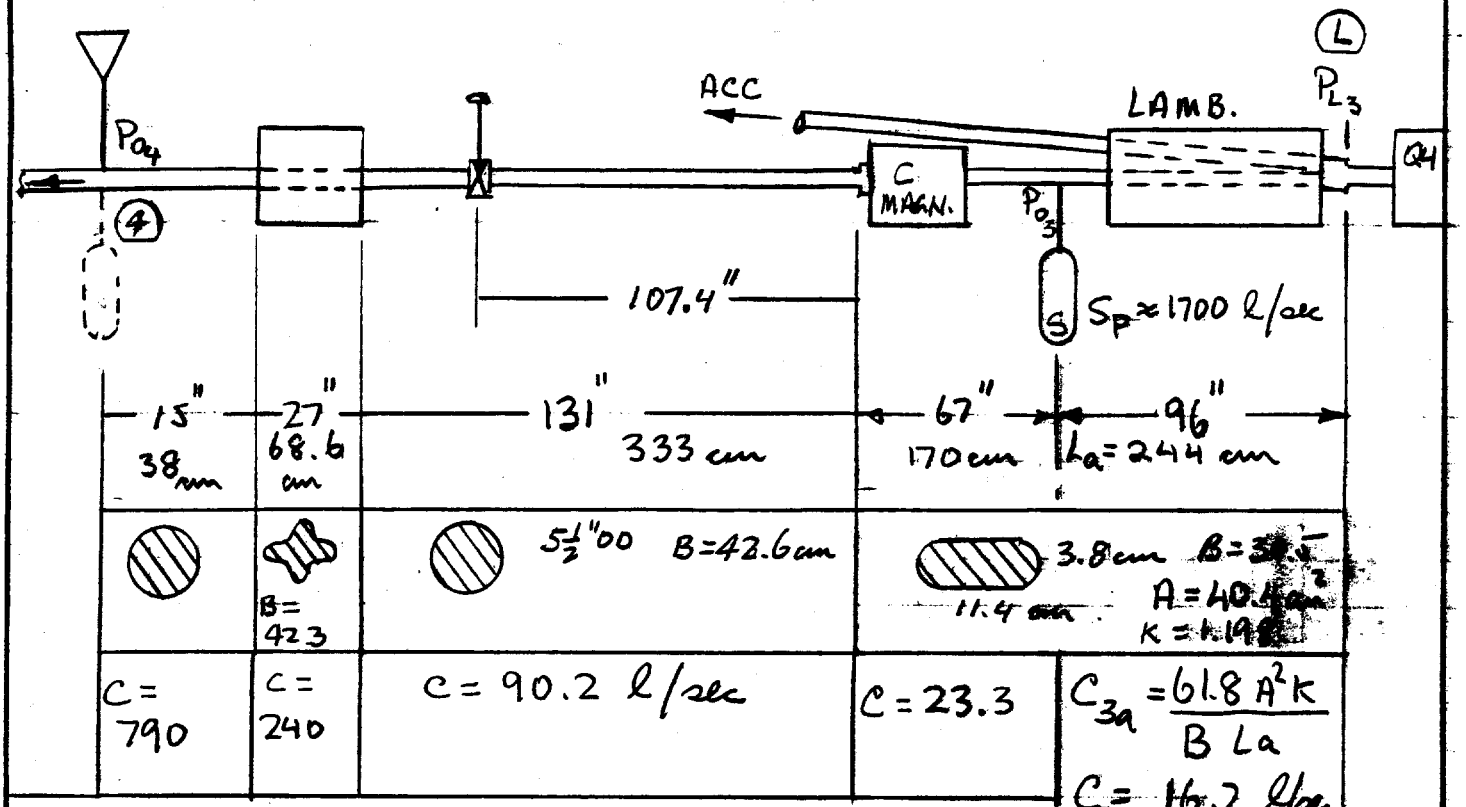

$$C_{3a} = \frac{61.8\,A^2 K}{B\,L_a}$$

$C_{3a} = 16.2$ l/sec

TOTAL CONDUCTANCE (4 TO L)

$$\frac{1}{C_{4L}} = \frac{1}{790} + \frac{1}{240} + \frac{1}{90} + \frac{1}{23} + \frac{1}{16} \qquad C_{4L} = 8.2 \text{ l/sec}$$

$B_{AV} = 36.7$ cm $\quad L_T = 855$ cm

$$P_{L_3} - P_{O_3} = q_D \frac{BL}{2C}$$

W/NO BAKE

$$\Delta P = 1\times10^{-12}\,\frac{30.5\ 244}{2\ 16.2}$$

$\Delta P = 2.3\times10^{-10}$ TORR (MARGINAL)

W/ 300°C BAKE

$\Delta P = 2.3\times10^{-11}$ TORR OK NEEDS BAKE

W/NO 300°C BAKE $\quad q_D = 1\times10^{-12}$ Tl/sec cm²

$$P_{L_3} - P_4 = \frac{1\times10^{-12}\ 36.7\ 855}{2\ (8.2)} = 1.9\times10^{-9} \text{ TORR (HIGH!)}$$

W/300°C BAKE

$P_{L_3} - P_4 = 1.9\times10^{-10}$ TORR (MARGINAL)

$$P_{L_3} = q_D BL\left[\frac{1}{S_p} + \frac{1}{2C}\right]$$

$P_{L_3} = 2.3\times10^{-11}$ TORR OK

NEED SUBLIMATION PUMP BETWEEN LAMBERSTON AND "C" MAGNET &

LAMBERSTON REQUIRES TO BE BAKED

FERMILAB ENGINEERING NOTE	SECTION	PROJECT	SERIAL-CATEGORY	PAGE
	OC	TEV I		3/4

SUBJECT	NAME	DATE	REVISION DATE
ACCUMULATOR EXTRACTION VACUUM ANALYSIS	JOHN SATTI	10-30-84	

ACCUMULATOR DOWNSTREAM OF LAMBERSTON

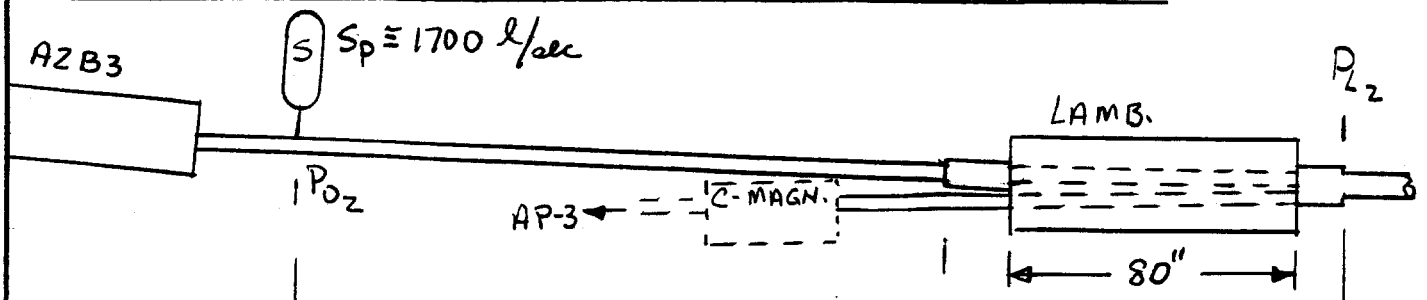

IN-SITU 300°C BAKE

$q_D = 1\times10^{-13}\ \frac{Tl}{sec\ cm^2}$

137" 348 cm	91.6" 233 cm
4" O.D. B = 32 cm	B = 21.3 cm
C = 33.0 l/sec	C = 13.7 l/sec
$\frac{1}{C_2} = \frac{1}{33} + \frac{1}{13.7}$ $C_2 = 9.68$ l/sec	$L_2 = 581$ cm $B_{AV} = 27.7$ cm

$$P_{L_2} - P_O = q_D \frac{BL}{2C}$$

$$= 1\times10^{-13}\ \frac{27.7(581)}{2(9.68)}$$

$$\Delta P_2 = 8.3\times10^{-11}\ \text{TORR}$$

$$P_{L_1} = q_D\ BL\left[\frac{1}{S_p} + \frac{1}{2C}\right] \quad \text{(ROTH p 133)}$$

$$= 1\times10^{-13}\ 27.7(581)\left[\frac{1}{1700} + \frac{1}{19.36}\right]$$

$$P_{L_1} = 8.4\times10^{-11}\ \text{TORR}$$

SUBJECT: ACCUMULATOR EXTRACTION VACUUM ANALYSIS

NAME: JOHN SATTI

DATE: 10-30-84 | REVISION DATE:

ACCUMULATOR UPSTREAM OF LAMBERSTON

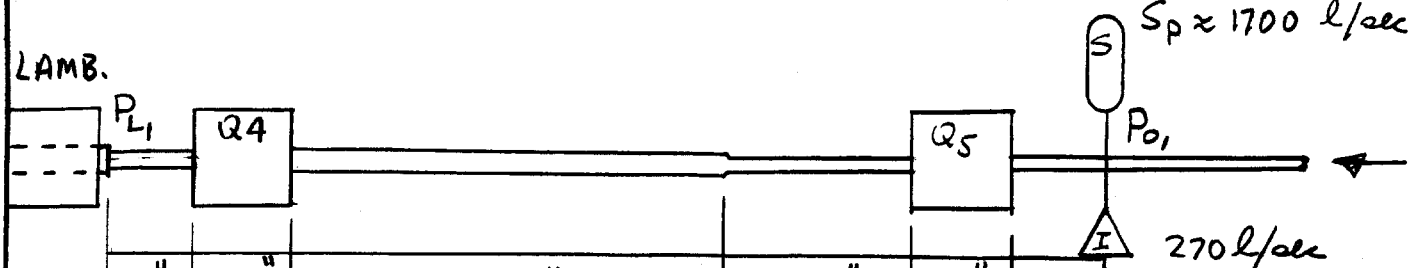

5"	21.5"	103"	22.5"	35"	15"
12.7 cm	54.6 cm	262 cm	57 cm	89 cm	38 cm
$5\frac{1}{2}$" OD	B = 32 cm	$5\frac{1}{2}$" OD, B = 42.5 cm	4" OD, B = 32		4" OD
2369	148	115	202	91	302

C l/sec

IN-SITU 300°C BAKE

$q_0 = 1 \times 10^{-13} \frac{T\,l}{sec\,cm^2}$

FOR AIR @ 20°C

$C = \frac{61.8\ A^2\ K}{B\ L}$

$L_1 = \Sigma L_n = 513$ cm.

CONDUCTANCE IN SERIES

$$\frac{1}{C_1} = \frac{1}{2369} + \frac{1}{148} + \frac{1}{115} + \frac{1}{202} + \frac{1}{91} + \frac{1}{302}$$

$C_1 = 28.47$ l/sec | $B_{AV} = 37.6$ cm

$$P_{L_1} - P_0 = q_0 \frac{BL}{2C}$$

$$P_{L_1} - P_0 = \frac{1 \times 10^{-13}\ 37.6\ 513}{2\ \ 28.47}$$

$$\Delta P_1 = 3.4 \times 10^{-11} \text{ TORR}$$

$$P_{L_1} = q_0\, BL \left[\frac{1}{S_p} + \frac{1}{2C}\right]$$

(REF. ROTH PG 133)

$$P_{L_1} = 1 \times 10^{-13}\ 37.6(513) \left[\frac{1}{1700} + \frac{1}{2(28.47)}\right]$$

$$P_{L_1} = 3.5 \times 10^{-11} \text{ TORR}$$