00606

$\bar{p}$ Note #93

10-3-80

PRECOOLER RING VACUUM SYSTEM

John S. Moenich

Introduction

The precooler vacuum system, as proposed by FNAL, is based on a suitable modification of the existing Electron Cooling Ring System. Because of the magnetic cycle of the bending magnets, distributed ion pumping, as exists in the Electron Cooling Ring, is not applicable. Instead, the proposed pumping will be done with commercial appendage ion pumps mounted approximately every two meters around the circumference of the ring. The loss of effective pumping speed and non-uniformity of system pressure with appendage pumps may not be major considerations but the large number required does effect experimental and analytical equipment placement considerations.

There is a distributed pumping technique available which:

1. is not affected by the magnetic cycle of the bending magnets
2. will provide a minimum of four (4) times the hydrogen pumping speed of the proposed appendage ion pumps
3. will require no power during pumping after the strip is activated
4. will provide the heat source for bakeout
5. is easily replaceable
6. can be purchased, installed, and operated at a generous economic advantage over the presently proposed ion pumped system

The pumping technique referred to is non-evaporable gettering with ST101 Zr/Al pumping strip. A technical description of this pumping strip is given on Data Sheet 1 and 2 attached to this report.

Properties of Zr/Al (Data Sheets 1 and 2) (Ref. 1, 2, and 3)

ST101 Zr/Al strip is a getter-coated strip obtained by deposition of a non-evaporable getter material onto a metal support either magnetic (Fe) or a non-magnetic (constantan). The getter material is an alloy, 84% Zr and 16% Al in powder form, with a surface area of about 0.16 M^2/g. The getter material forms thermally stable chemical compounds with the majority of the active gases (O_2, N_2, CO, CO_2, and H_2O), while the sorption of the H_2 is thermally reversible. If large quantities of gases producing stable compounds are to be pumped, the Zr/Al getter is operated at a temperature. The optimum operating temperature of the getter is 400°C if these gases must be pumped at pressures above 1×10^{-7} Torr. Lower temperatures are sufficient at lower pressures and H_2 can be easily pumped at room temperature at pressures below 1×10^{-8} Torr. Total capacity for the heavy active gases is about 0.6 Torr ℓ per cm^2 of strip. For H_2 the absorption of larger quantities produces embrittlement. Below this limit H_2 can always be redesorbed by heating.

An essential requirement before efficient operation can be expected from the getter is activation of its pumping surface. This is done by diffusion of the saturated surface layer into the bulk of the material through heating the strip to ≈700°C for about 45 minutes. The heating also reduces the H_2 content in the getter whenever the H_2 dissociation pressure of the getter exceeds the H_2 pressure in the vacuum system. After regeneration, the gettering action depends on the amounts and molecular species of the gases which are pumped. Heating, for both the activation process and operation, is by direct passage of current through the strip.

Operating Characteristics of Zr/Al

ST101 Zr/Al pumping strip has a pumping speed of about 1 ℓs^{-1} cm^{-2} for H_2. In the presence of a 30 ℓ sec^{-1} sputter-ion pump it can maintain this pumping speed and repeatedly produce pressures in the low 10^{-10} Pa region (Ref. 1). Valves quoted for higher pressure operation indicate that this non-evaporable getter can maintain its pumping speed independent of pressure.

After 30 exposures to air (at room temperature) there is a 50% reduction of the H_2 pumping speed (Ref. 3). If dry N_2 is used instead of air, pumping speed reduction after the same number of exposures appears to be very small. This is shown in Fig. 1. A further improvement can be obtained when Argon is used as a protective gas.

After each exposure (which must take place at room temperature), reactivation of the strip is necessary following pumpdown. The strip must be heated to approximately 700°C in a vacuum of 1×10^{-5} Torr or better for 45 minutes to properly activate it. Result of thermal cycling tests (Ref. 4) show that when cycling between 75°C and 700°C, more than 250 cycles were possible before any sign of initial peel off of Zr/Al was evident. Reducing the range from 700°C to 600°C raised the number of cycles possible to ≈800.

Tests at Argonne National Laboratory and elsewhere have shown that these Zr/Al pumping strips can be held at their activating temperatures for periods of at least 36 hours without any detrimental effects to their pumping ability. Such findings permit using the Zr/Al strip not only as a source of pumping but also as a source of heat for baking the vacuum chamber.

Figures 2, 3, 4, and 5 prepared by McDonnel Douglas (Ref. 5) reflect the ability of the pumping strip as a heating source and the effect of the heat on the bending magnets. Experiments on the test system (Fig. 6) indicate that bake out temperature of ≈350°C, using the Zr/Al strip as a heater, can be reached in less than 5 hours. Total time for pumpdown, through bakeout and cooldown to room temperature is ≈48 hours. Pumpdown and pumping

during the bakeout cycle is accomplished with a trapped turbomolecular pumping station. Two 20 ℓ /sec baked ion pumps, positioned as shown in Fig. 6 are activated ≈2 hours before all baking is discontinued. The tubomolecular pumping station is isolated from the system after no appreciable pressure rise is experienced when the isolation valve is closed momentarily.

After cooldown the base pressure of the test system (Fig. 6) is between 1 and 2 x 10^{-10} Torr. No pumping strip was installed in the straight section during the tests so far. Baking of the straight section was done with external heating tapes. With no pumping in the straight section, gauges installed in the center of the curved and straight section differed by less than a factor of 2. The base pressures cited here could be improved by better preconditioning of the system and more precautions during assembly. The test chambers as used were electropolished but had been exposed for weeks to shop environment before being wiped with an acetone dampened cloth and assembled in the same shop environment.

Precooler Vacuum System Design:

Approximately 3.8 meter long Zr/Al pumping strips distributed equally around the Precooler with about two meter gaps between them would provide about 320 linear meters of pumping. Based on pumping from one side of the strip only and at a speed of one liter per second per square centimeter, a minimum of ≈100,000 liters of pumping speed for hydrogen will be available. Pumping from the bottom side of the strip is not considered because of its close proximity to the wall and therefore limited conductance. The Zr/Al pumping strips will be distributed within the dipole magnet vacuum chamber as shown in Fig. 7. No pumping strips are planned for the quadrupole regions. A 30 ℓsec^{-1} ion pump will be mounted between each pair of quadrupoles. It is anticipated that at least 14 meters of pumping strip will be permitted in each 19 meter long straight section with the appropriate complement of ion pumping (one 30 ℓ sec^{-1} ion pump for approximately each 4 meters of pumping strip).

Since the pumping strip must be heated to $\approx 700^{\circ}C$ to activate it, and for baking, and since this is done by running current through it, the strip is insulated from ground 1/4" x 1/4" x 2" long Macor ceramic insulators placed every 5 cm along its length. Both edges of the pumping strip are held to the insulator by stainless steel binding head screws (Fig. 7). The ends of the strips are mounted to leak tight feedthrough capable of baking to $450^{\circ}C$.

If all regions of the vacuum chamber are baked uniformally at about $350^{\circ}C$ and assuming an outgassing rate of 1×10^{-12} Torr ℓ sec^{-1} cm^{-2}, an average base pressure of $\approx 3 \times 10^{-11}$ Torr is achievable. Since, however, there are no pumping strips in the quadrupole regions and therefore no baking, average base pressure will be a decade higher. This average pressure will still be well below the design requirements.

The vacuum chamber components for the Precooler would be joined together by welding. The required ion pumps would also be mounted into position by welding. The feedthrough ports for the Zr/Al strips however would have conflat flanges for ease of accessibility and installation of the pumping strip. The pumping strips would be pulled into position through the feedthrough ports with the aid of a wire puller commonly used to pull electrical wiring through conduit. One end of the pumping strip can be attached to the feedthrough and the feedthrough in turn can be mounted to the port (Fig. 8). The feedthrough on the other end would have a bellows. By compressing the bellows as shown in Fig. 8, the other end of the pumping strip can be attached. Once the feedthrough is mounted, slack in the pumping strip can be taken up by expanding and straightening the bellows by use of the expander bolts. Installation or replacement time of a pumping strip should take approximately 1-1/2 to 2 hours. This of course is in addition to the conditioning time to return the system to its operating pressure.

Based on the assumption that one will be able to isolate the Precooler ring into four quadrants, the electrical load for the Zr/Al strips will be powered from four points, one in each quadrant. Each quadrant will have twenty-one 3.8 meter gettering strips, spaced approximately 1.85 meters apart and connected into 3 series groups. Each gettering strip will be brought out of the vacuum system on vacuum feed-throughs and interconnection will be made outside the vacuum system. The power required per quadrant is 57,344 watts or ≈8V, 89.6 A per meter of gettering strip. Maximum voltage to ground from the gettering strips will be 132V. The power equipment and circuit to power the gettering strips for the Precooler, as designated by Don McGhee from ANL, are outlined in Fig. 9.

Data Sheet 3 is a comparison cost summary of an ion pumped system and a combination Zr/Al-ion pumped system. Installation costs are not included in these figures. It is estimated, however, that the additional 40 ports required and the mounting of the ST101 pumping strips to the ceramic standoffs, will cause installation costs for System I to run approximately $7500 higher than for System II (See Data Sheet 3). Should additional chamber width be required to avoid interference between the beam and the pumping strip, material costs for the chambers will increase by about 20%. Increased gas load from the additional surface area however will be adequately handled by the ≈50,000 ℓ/sec effective pumping speed from the bottom side of the pumping strip. This available speed was not included in the 100,000 ℓ/sec hydrogen pumping speed figure given earlier in this paper.

Research and development to date has confirmed the majority of the data given above. Future development must include the testing and evaluation of mounting, installation, and replacement techniques compatible to Precooler design.

References

1. C. Benvenoti and J. C. Decroux, "A Linear Pump for Conductance Limted Vacuum Systems," Proceedings from the Seventh International Conference on Solid Surfaces (Vienna 1977).
2. B. Ferrario, A. Barosi, M. Borghi, and T. A. Girogi, "H_2, D_2 and T_2 Pumping and Handling in Fusion Experiments Using SORG-AC Non-Evaporable Getter Cartridges," S.A.E.S. Getters S.P.A., Gallarate 215, 20151 Milan, Italy.
3. B. Ferrario and L. Rosai, "Behavior of SORB-AC Wafer Pumps in Contaminated H_2 Plasmas and During Maintenance of Plasma Machines," S.A.E.S. Getters S.P.A. Milano, Italy
4. "Thermal Cycle Test Results," Received on request from S.A.E.S. Getters.
5. "Vacuum System Study for Heavy Ion Beam Fusion," McDonnel Douglas Astronautics Co.

DATA SHEET NO. 1

TECHNICAL DESCRIPTION OF St 101 STRIP

TYPE St 101/CTAM/30 D

- SUBSTRATE MATERIAL — Constantan (anti-magnetic alloy 55% Cu – 45% Ni)
- GETTERING MATERIAL — St101(R) alloy (84% Zr – 16% Al)
- NOMINAL THICKNESS OF SUBSTRATE — 0.2mm
- NOMINAL THICKNESS OF COATED MATERIAL — 0.07mm per side
- QUANTITY OF GETTERING MATERIAL COATED ONTO THE SUBSTRATE — about 28mg/cm^2
- DIMENSIONS OF THE STRIP — see the attached drawing
- SUGGESTED ACTIVATION CONDITIONS — 700°C for 45 min under vacuum
- OPERATING CONDITIONS — in the range 20–400°C
- GETTERING CHARACTERISTICS:

	CO	N_2	O_2	H_2
pumping speed (at 400°C) (l/sec cm^2)	1.1	0.2	2.3	1.4
capacity (after several reactivations)(ltorr/cm^2)	0.06	0.215	0.3	0.55*

(*) embrittlement limit at 20°C. H_2 is sorbed in a reversible way according to the equilibrium law $\log P\,(\text{torr}) = 4.4 + 2 \log q\,\left(\frac{\text{l torr}}{\text{grSt101}}\right) - \frac{7000}{T(K)}$

- APPROXIMATE ELECTRIC PARAMETERS FOR ACTIVATION AND OPERATION

(a) with a reflector facing one side
(b) in the free space

	700°C	400°C	200°C	
POWER (watt/meter)	990	225	55	(a)
	1810	410	100	(b)
CURRENT A (DC or AC)	110	53	26	(a)
	150	71	35	(b)

- OTHER PHYSICAL CHARACTERISTICS

DATA SHEET NO. 2

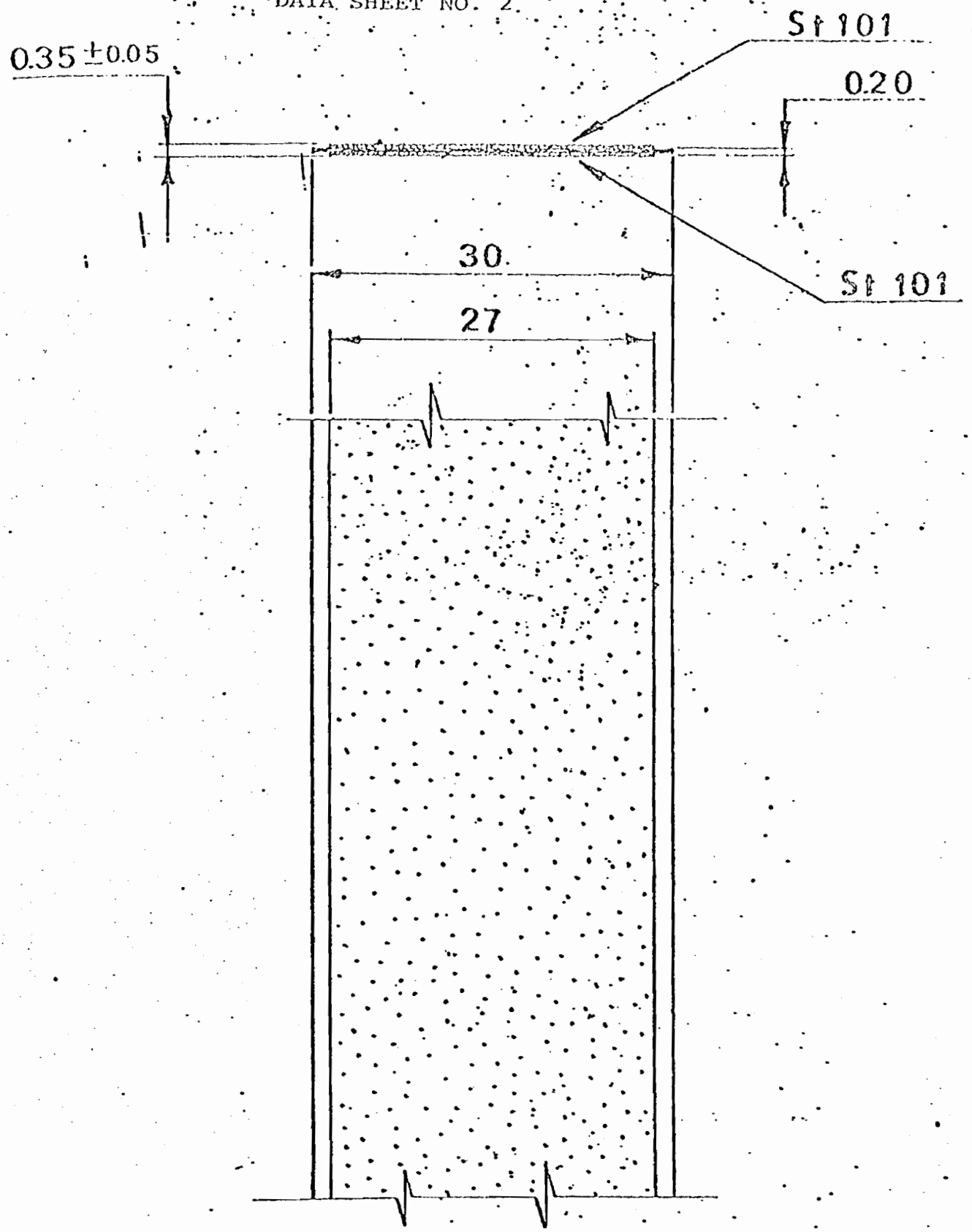

SCALE	DRAWN	MATERIAL	DATE	REVISIONS
2 : 1	Marcu	Substrate: COSTANTAN (55 Cu - 45 Ni ALLOY) Gettering Material St 101(R) (84 Zr - 16 Al ALLOY)		
DATE 4-5-79	CHECKED			
	APPROVED			
		TITLE	DRAWING NUMBER	

DATA SHEET NO. 3

VACUUM SYSTEM COMPARISON COST SUMMARY

	System I Zr/Al-Ion Pumped System	System II Ion Pumped System
1. 200-60 ℓ/sec ion pumps, power supplies and cables		$444,000
2. 320 meters Zr/Al strip $72.00/meter	$ 23,000	
3. 80-30 ℓ/sec ion pumps, power supplies and cables	125,000	
4. Vacuum chamber, bellows and parts	156,000	156,000
5. Valves	42,000	42,000
6. Heaters and Insulation	30,000	60,000
7. High temperature degassing	36,000*	36,000
8. Instrumentation	24,000	24,000
9. Roughing stations	36,000	36,000
10. 160 feedthrough ports for Zr/Al	32,000	
11. 160 feedthroughs for Zr/Al	24,000	
12. 80 additional bellows for Zr/Al	20,000	
13. Insulators for Zr/Al strips	20,000	
14. Power supplies and parts for Zr/Al assembly	20,000	
15. Miscellaneous, stands, ceramic insulators, parts	30,000	30,000
Total	$618,000	$828,000

*Optional-Required base pressure can be achieved without it

H_2 Pumping Speed per Unit Area of a Wafer Getter Panel Surface Versus the Numbers of Exposures to 760 Torr of N_2 (Purity: Research Grade) after Activation and Cooling to Room Temperature.
Activation: 700° C × 45' - Sorption at 400° C and 1.3×10^{-3} Pa (1.10^{-5} Torr)

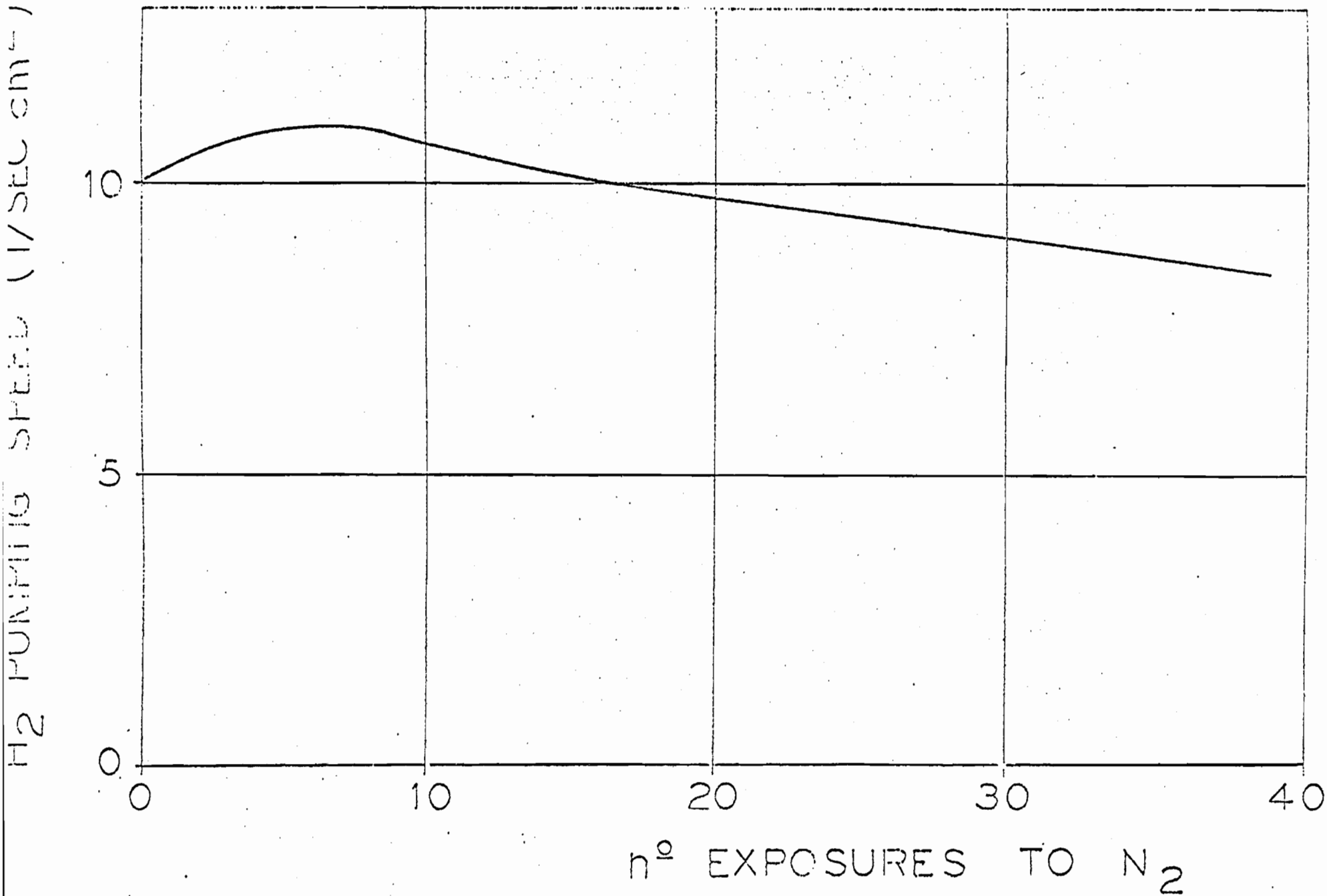

FIG. 1.

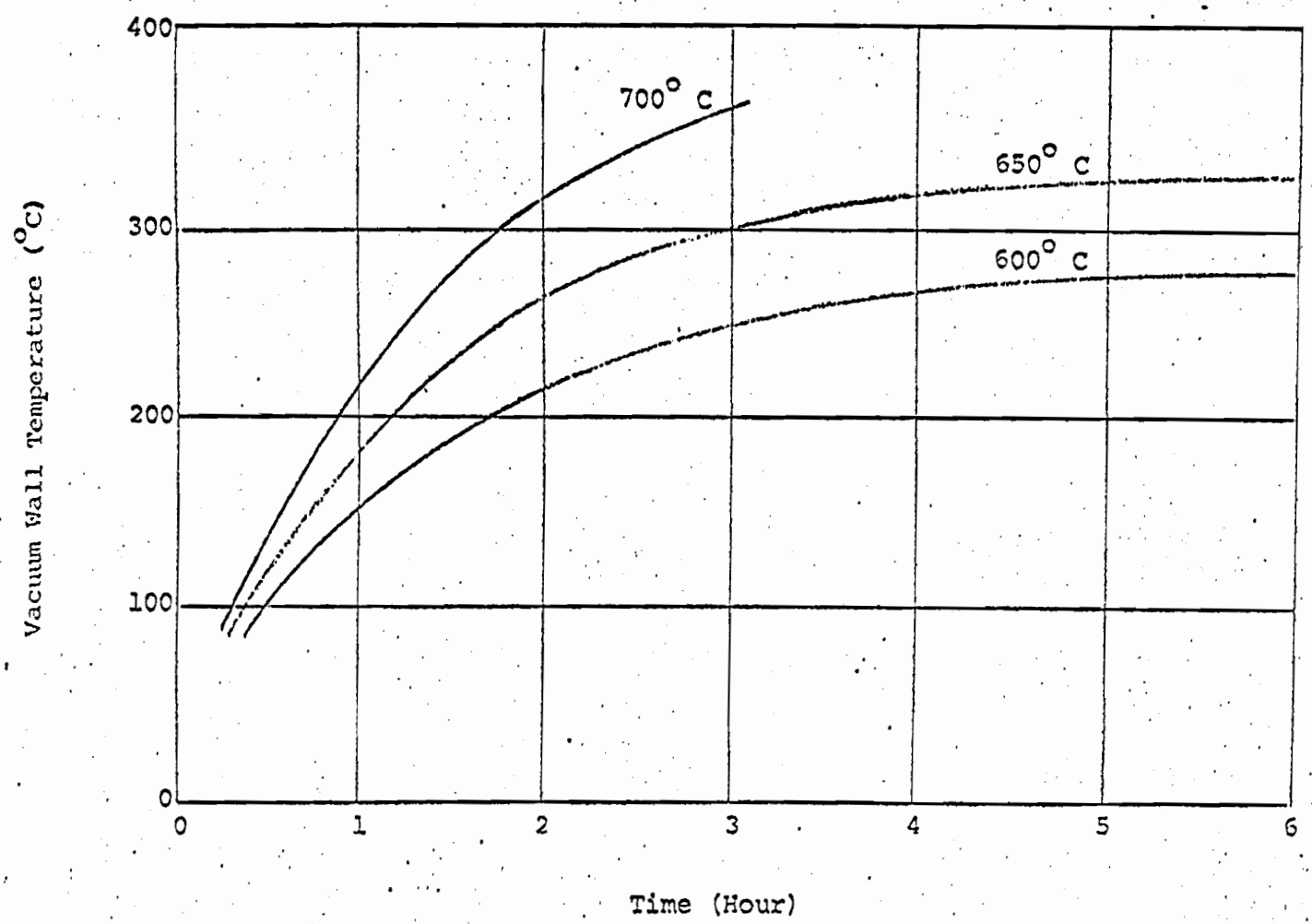

Fig. 2. Time to Reach Bakeout Temperature for Various ZrAl Temperatures in Curved Sections

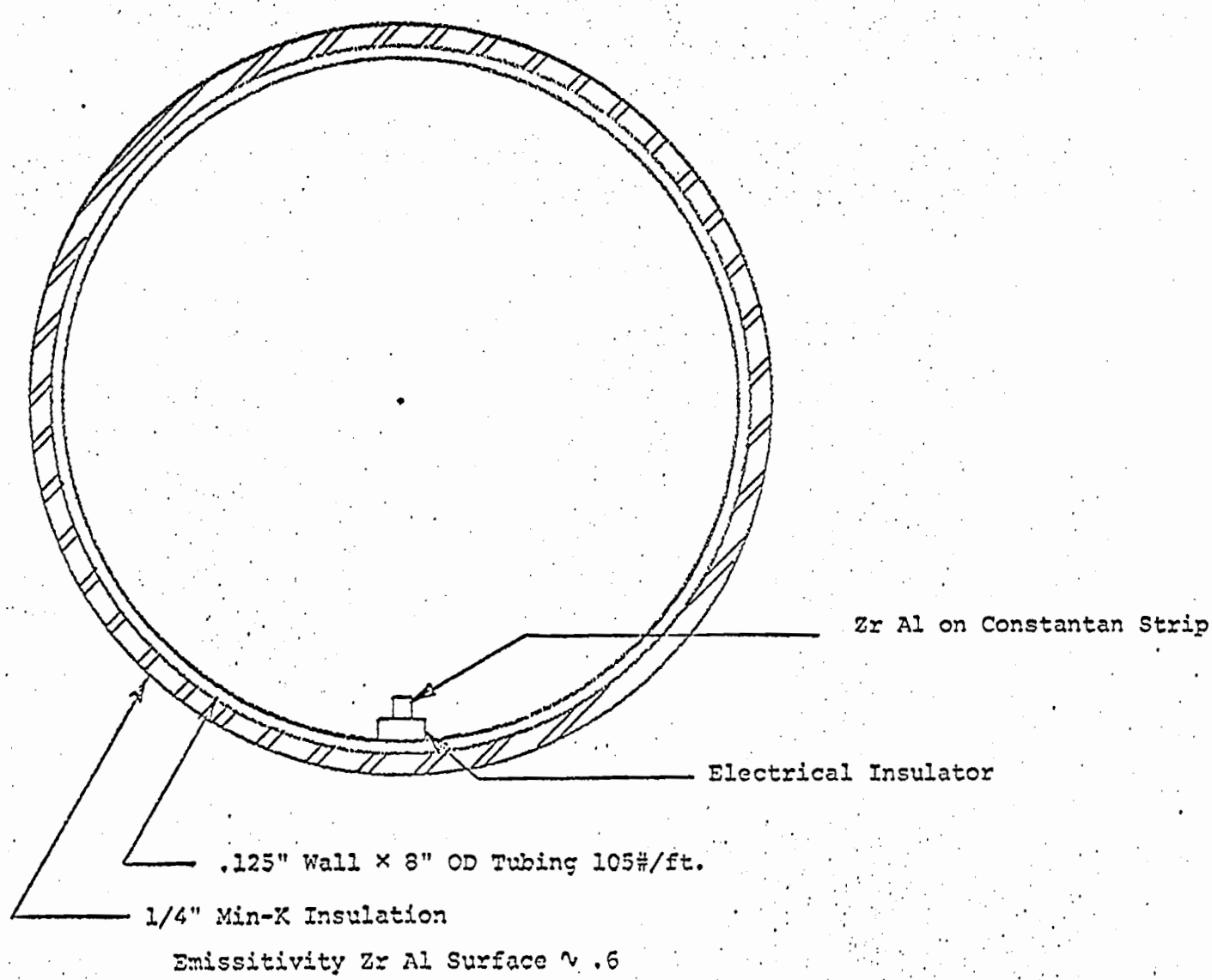

Fig. 4. Straight Section Thermal Bake-Out Configuration

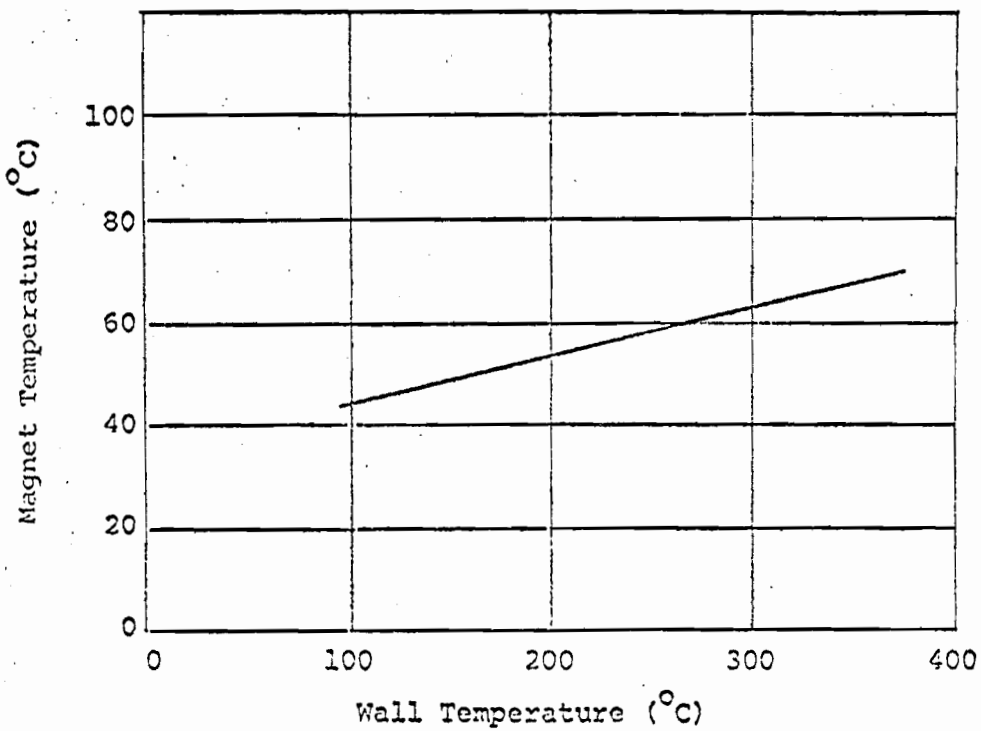

Fig. 3. Curved Magnet Temperatures for Various Vacuum Wall Temperatures

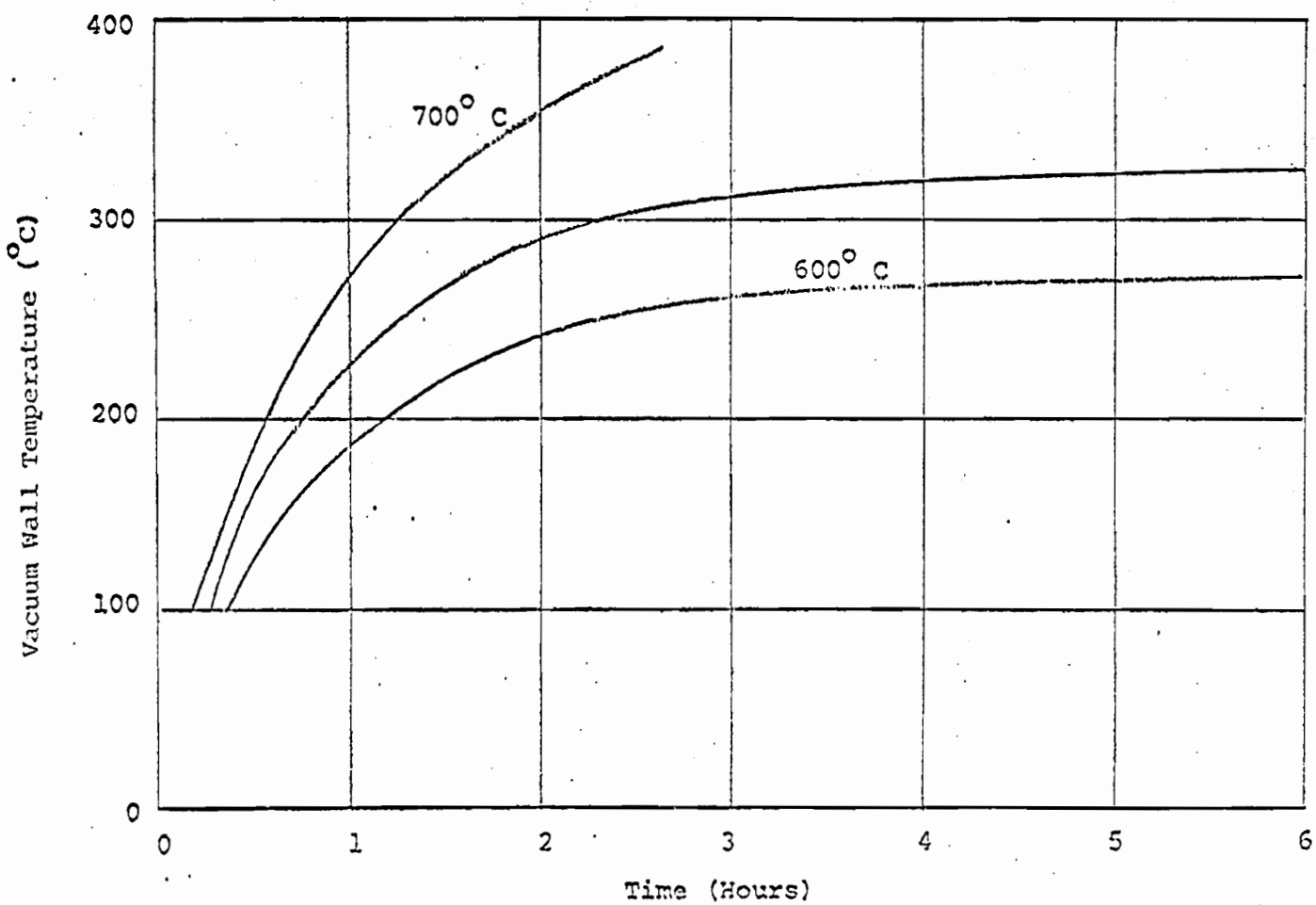

Fig. 5. Time to Reach Bake-Out Temperature for Various ZrAl Temperatures in Straight Sections

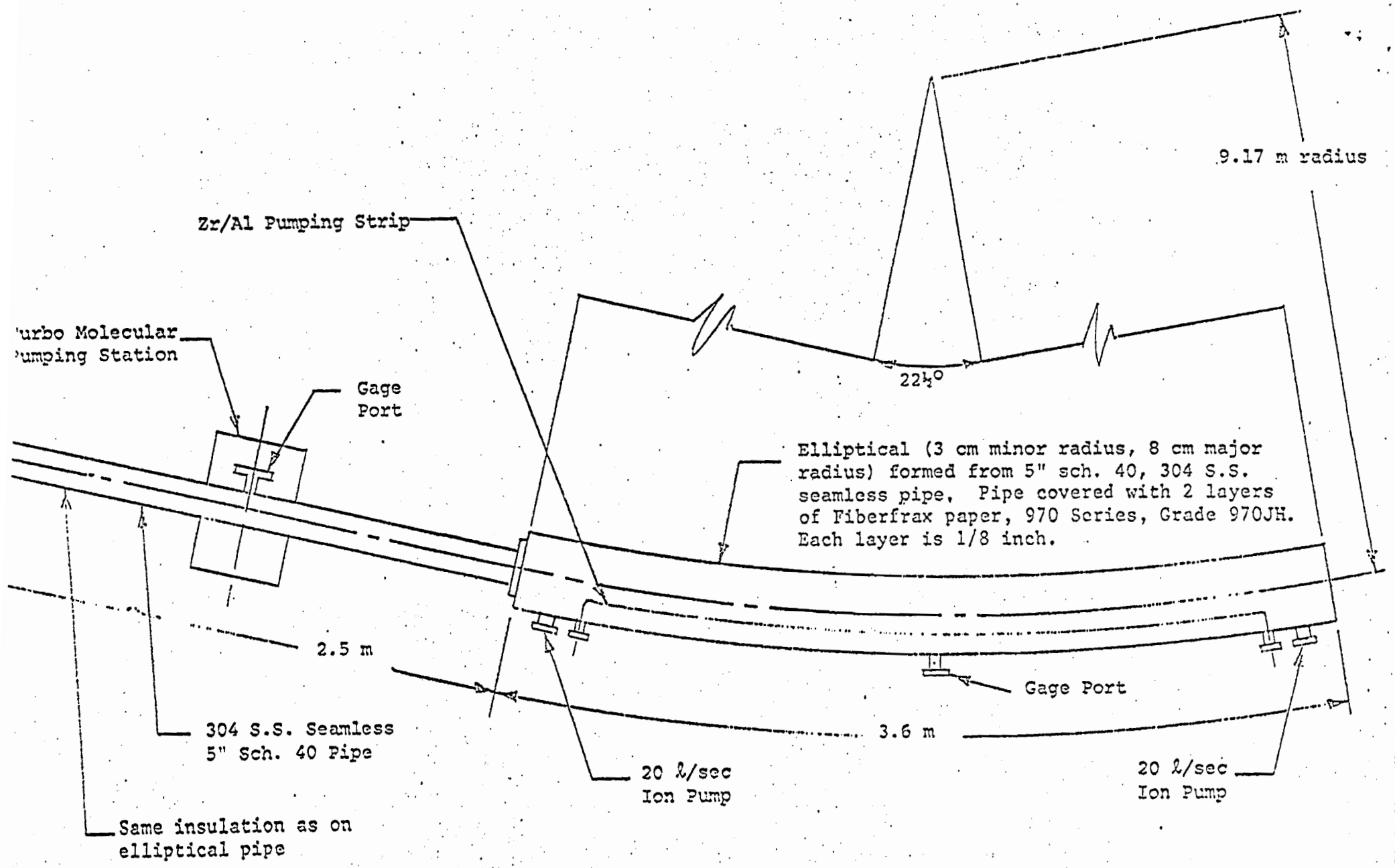

Fig. 6 Test System

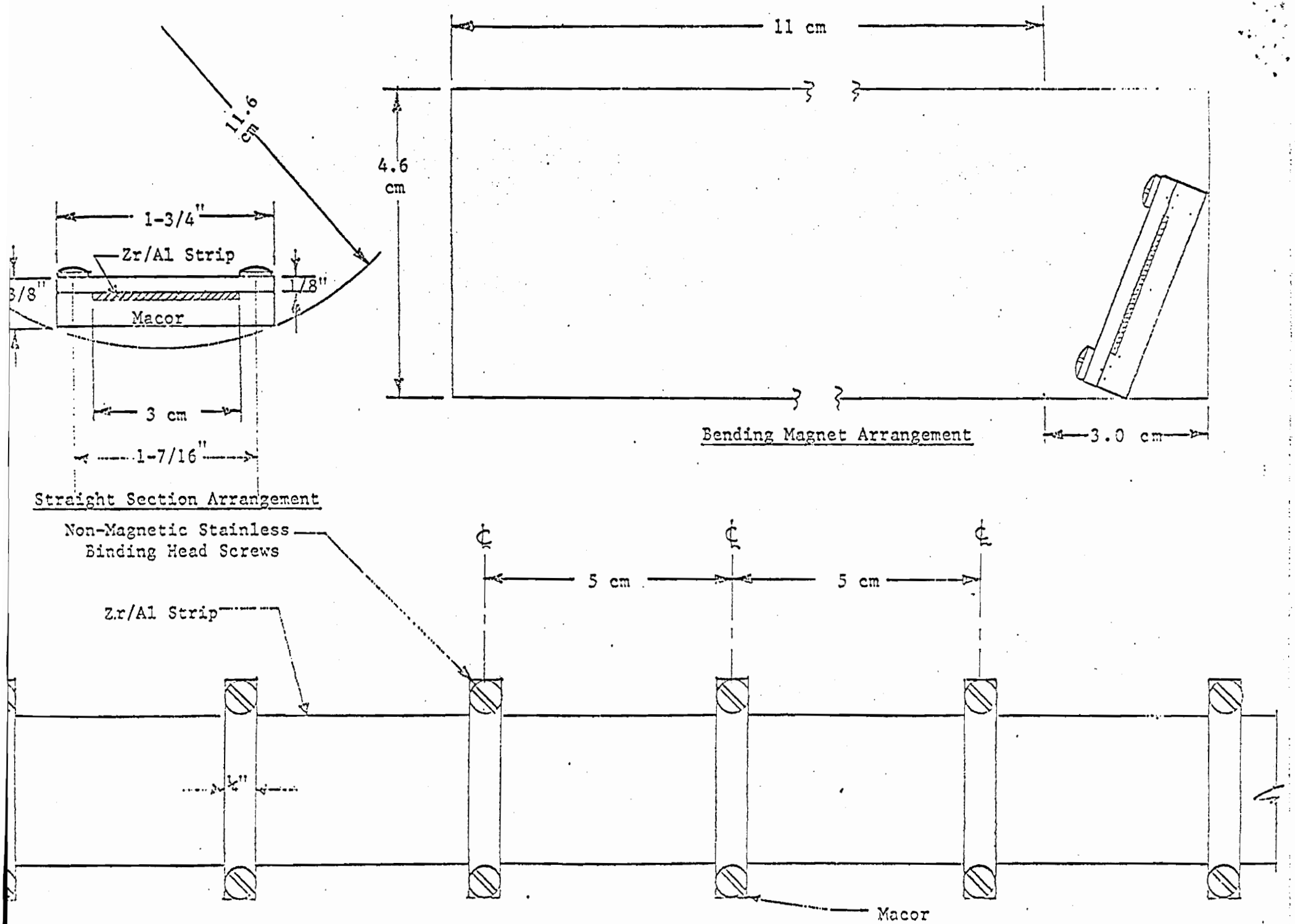

Fig. 7 Insulating Zr/Al Strip From Ground

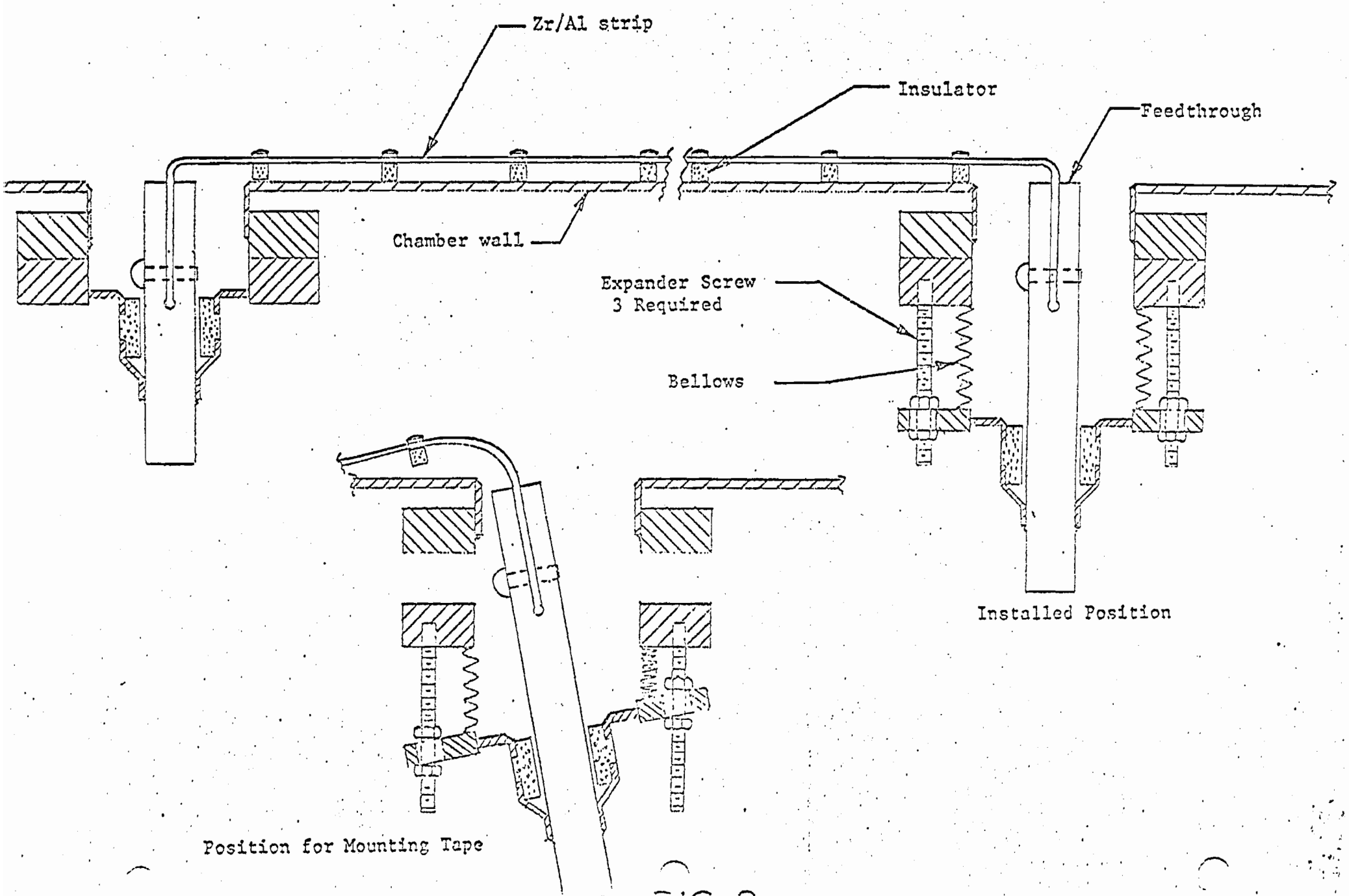
Zr/Al strip
Insulator
Feedthrough
Chamber wall
Expander Screw
3 Required
Bellows
Installed Position
Position for Mounting Tape