2/16/98
Al Sondgeroth

PBAR Note 588

Moving Elements in the Pbar Source Debuncher to Accumulator line to Facilitate the Debuncher Cooling Upgrade

The debuncher cooling system is one of the Pbar systems being upgraded for the upcoming Tevetron II run. The new pickup tanks to be installed in the debuncher would interfer with the existing debuncher to accumulator transfer line layout. A solution to the problem, outlined in this paper, is to move some of the elements in the D/A line to make room for the new tanks and also change the magnetic fields in the D/A line quadrupoles to keep the optics of the beam unchanged from previous runs. Page 3 shows the existing configuration. Page 4 shows how the new pickup tanks would interfer with the existing D/A line layout. There are two problems here. The first problem is the new pickup tank and TQ1 interfer with each other by approximately 0.25" in the horizontal plane at the upstream end of the D/A line. The second problem is the cryogenic bypass between two of the new pickup tanks interfers with TQ2. By moving V801 to the beginning of the D/A line and also moving TQ1 and TQ2 towards the accumulator by another 20" solves these problems. V802 has a smaller cross section than TQ1 so it won't interfer with the new pickup tank and the space between TQ1 and TQ2, now with V802 moved will give the needed room for the cryogenic bypass. Page 5 shows the new layout.

The magnetic fields in the quadrupoles were changed by Frank Bieniosek using a program known as P138 on the Pbar menu of the ACNET controls system. Page 6 shows the output of P138 with the existing setup. Page 7 shows the output with the new setup. The following table lists the old and new currents for the magnets.

Magnet	Old Current	New Current
TQ1	231.8 amps	235.0 amps
TQ2	231.8 amps	252.0 amps
TQ3	231.8 amps	252.0 amps
TQ4	158.0 amps	149.9 amps
TQ5	172.8 amps	165.0 amps
TQ6	172.8 amps	165.0 amps
TQ7	61.0 amps	61.0 amps

A shunt will have to be moved from TQ2 to TQ1 to accomadate these changes. The following table shows the old and the new beam characteristics at the end of the files.

Characteristic	Old Value	New Value
BETAX	9.920722	9.845492
ALPHAX	-0.1866917	0.0249014
ETAX	0.5397773	0.5106105
BETAY	7.633667	8.394958
ALPHY	-0.4516582	-0.2110449
ETAY	-0.0067267	-0.0132494

There are times when we need to run proton in the opposite direction in the beamline. Page 8 shows the P138 output for the beamline with the magnets layed out in the reverse order.

Al Sondgeroth ran TRANSPORT using the old configuration and the new configuration. Phase space plots are shown on pages 9 and 10. The following table shows the old and new fields for the magnets.

Magnet	Old Field	New Field
TQ1	9.592 T/m	9.724 T/m
TQ2	-9.593 T/m	-10.429 T/m
TQ3	9.593 T/m	10.429 T/m
TQ4	-6.554 T/m	-6.218 T/m
TQ5	6.515 T/m	6.857 T/m
TQ6	-6.515 T/m	-6.857 T/m
TQ7	2.571 T/m	2.571 T/m

Page 11 shows the old floor coordinates and page 12 shows the new floor coordinates. Any questions or comments can be reffered to Al Sondgeroth at x8516 or e-mail address sondgeroth@fnal.gov.

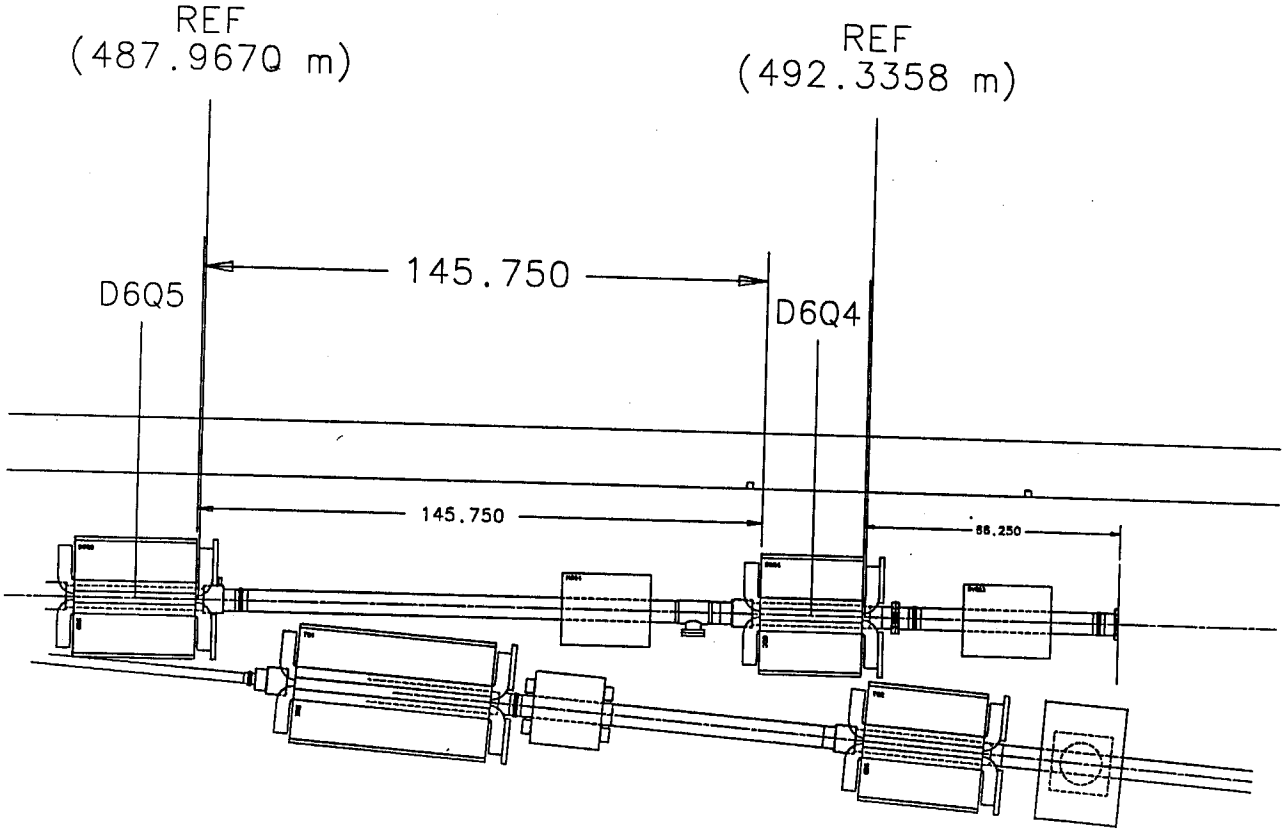

PARTS LIST

FERMI NATIONAL ACCELERATOR LABORATORY
UNITED STATES DEPARTMENT OF ENERGY

D6Q4 TO D6Q3 (PLAN VIEW)
BEFORE TANKS

CREATED WITH I-DEAS_V1

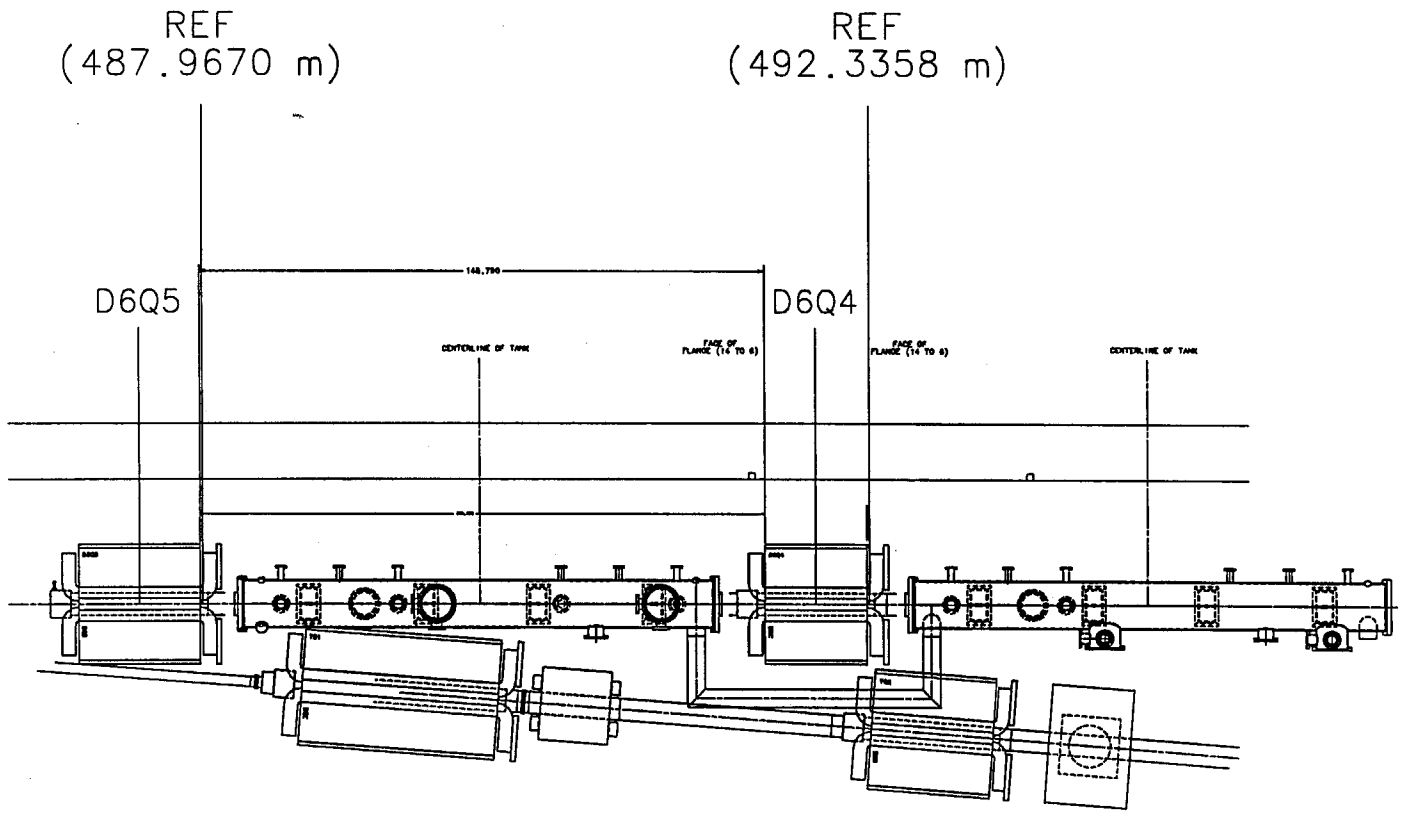

ITEM	PART NO.	DESCRIPTION OR SIZE	QTY.

PARTS LIST

DRAWN	J. WISCH		
CHECKED	J. EDWARDS		11/17/97
APPROVED			
USED ON			
MATERIAL			

FERMI NATIONAL ACCELERATOR LABORATORY
UNITED STATES DEPARTMENT OF ENERGY

D6Q4 TO D6Q3 (PLAN VIEW)

SCALE 1:10

CREATED WITH I-DEAS_V1

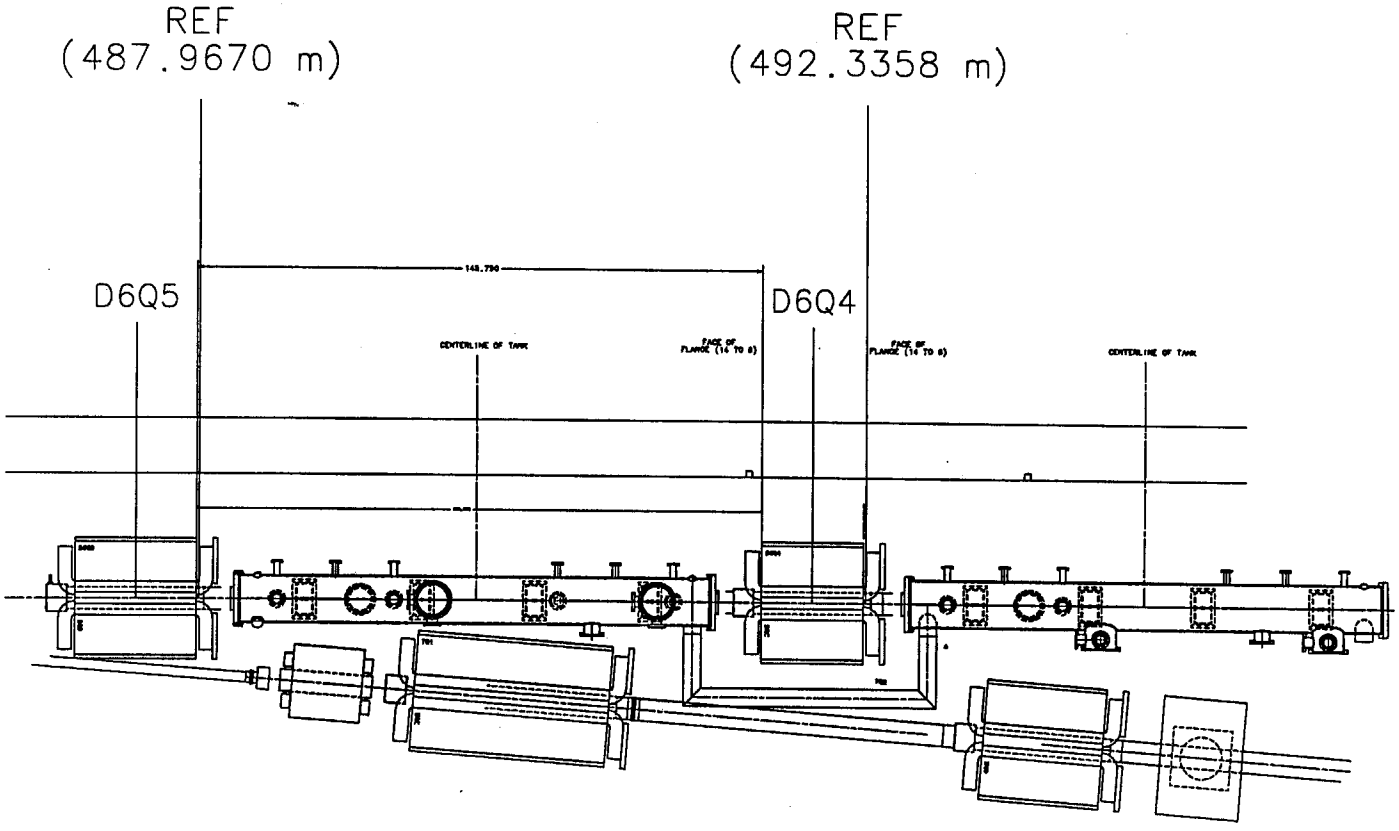

ITEM	PART NO.	DESCRIPTION OR SIZE	QTY.
		PARTS LIST	

DRAWN J. MISEK
J. EDWARDS 11/17/97

FERMI NATIONAL ACCELERATOR LABORATORY
UNITED STATES DEPARTMENT OF ENERGY

D6Q4 TO D6Q3 (PLAN VIEW)
WITH TQ1 SET 30" DOWNSTREAM

SCALE 1:10

CREATED WITH I-DEAS_V1

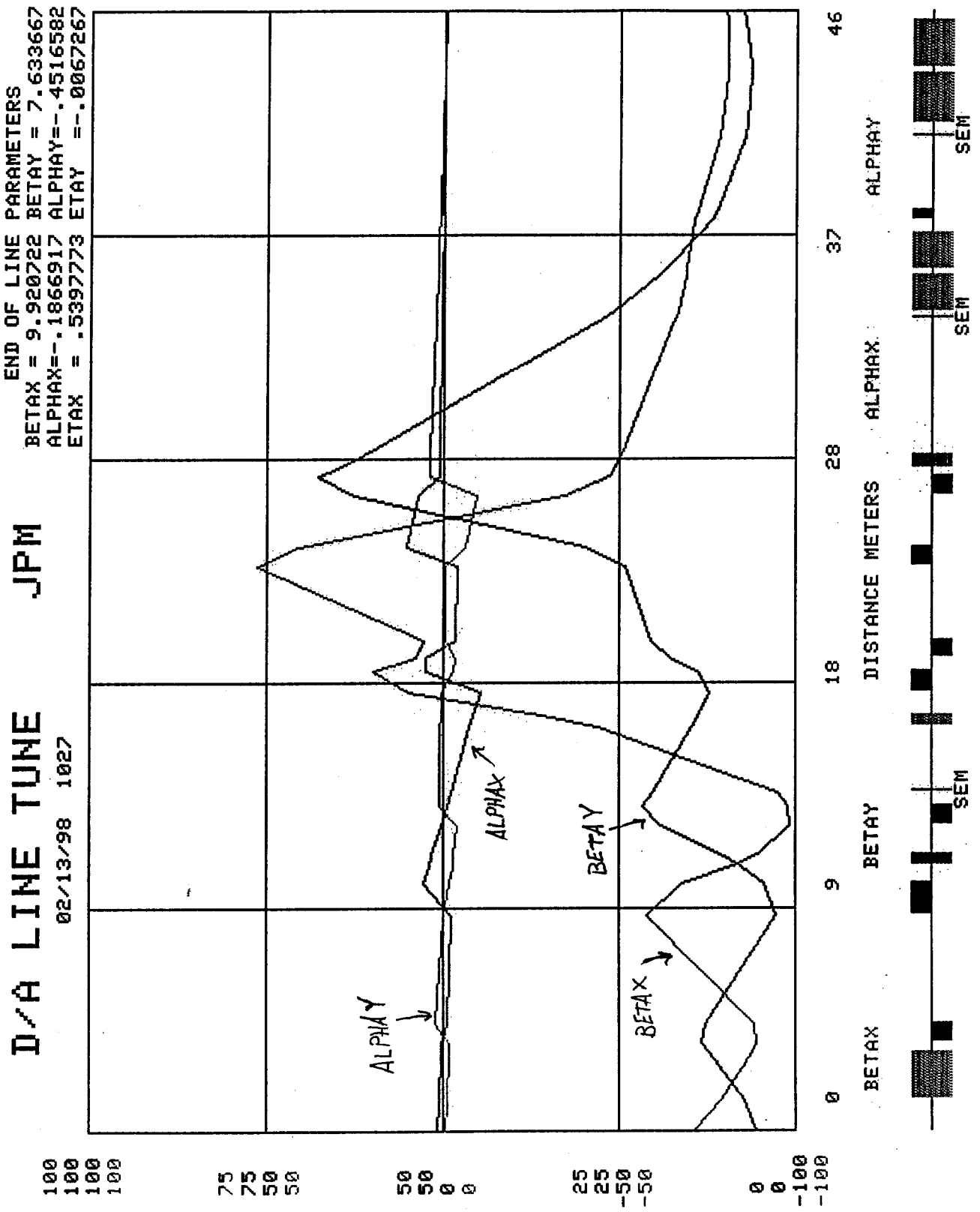
D/A LINE TUNE JPM
02/13/98 1027
END OF LINE PARAMETERS
BETAX = 9.920722 BETAY = 7.633667
ALPHAX=-.1866917 ALPHAY=-.4516582
ETAX = .5397773 ETAY =-.0067267
ALPHAY
ALPHAX
BETAY
BETAX
100 100 100 100
75 75 50 50
50 50 0 0
25 25 -50 -50
0 0 -100 -100
0 9 18 28 37 46
DISTANCE METERS
BETAX
BETAY
ALPHAX
ALPHAY
SEM
SEM
SEM

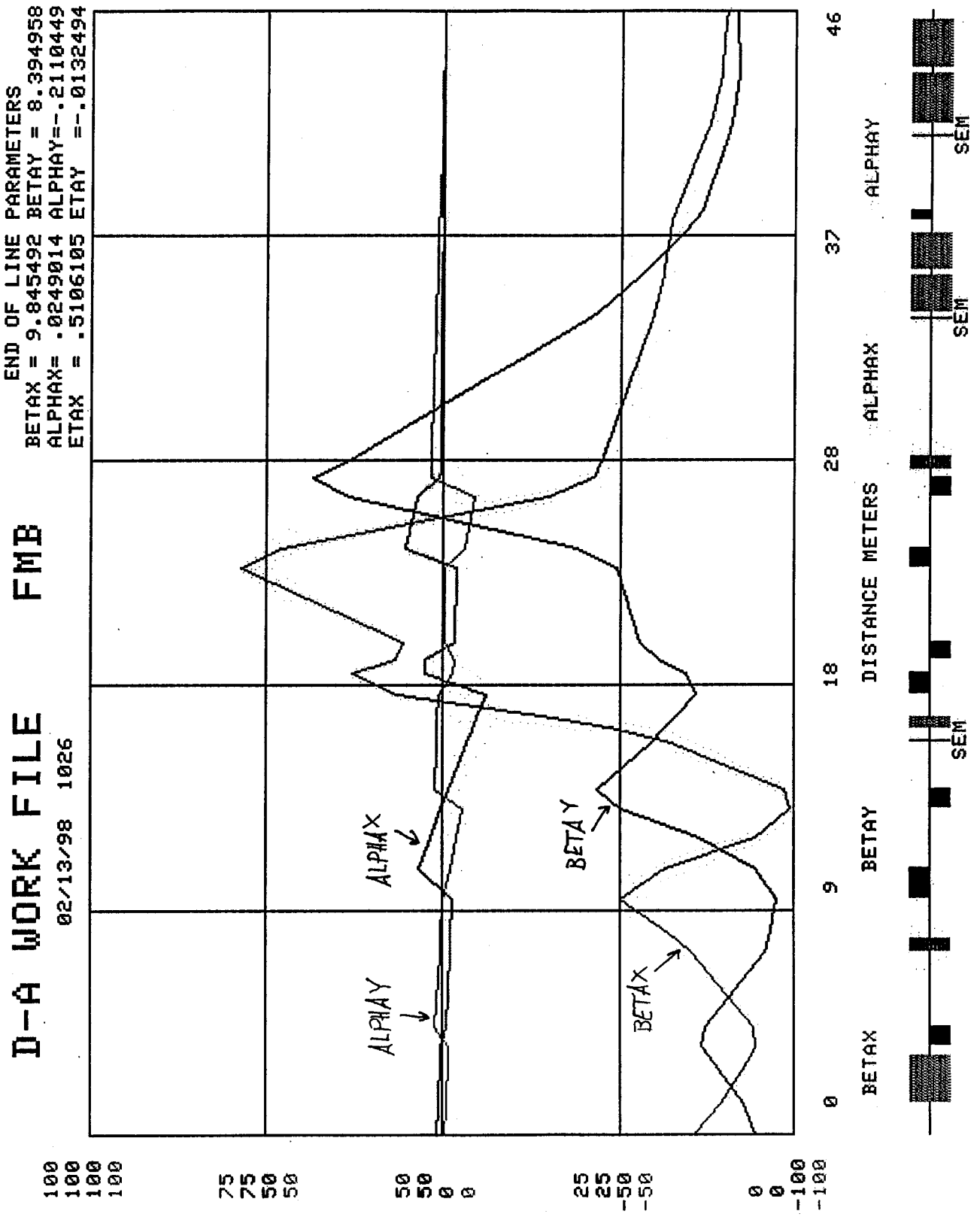
D-A WORK FILE
02/13/98 1026
FMB
END OF LINE PARAMETERS
BETAX = 9.845492 BETAY = 8.394958
ALPHAX= .0249014 ALPHAY=-.2110449
ETAX = .5106105 ETAY =-.0132494
ALPHAY
ALPHAX
BETAY
BETAX
100 100 100 100
75 75 50 50
50 50 0 0
25 25 -50 -50
0 0 -100 -100
0 9 18 28 37 46
DISTANCE METERS
BETAX
BETAY
ALPHAX
ALPHAY
SEM
SEM
SEM

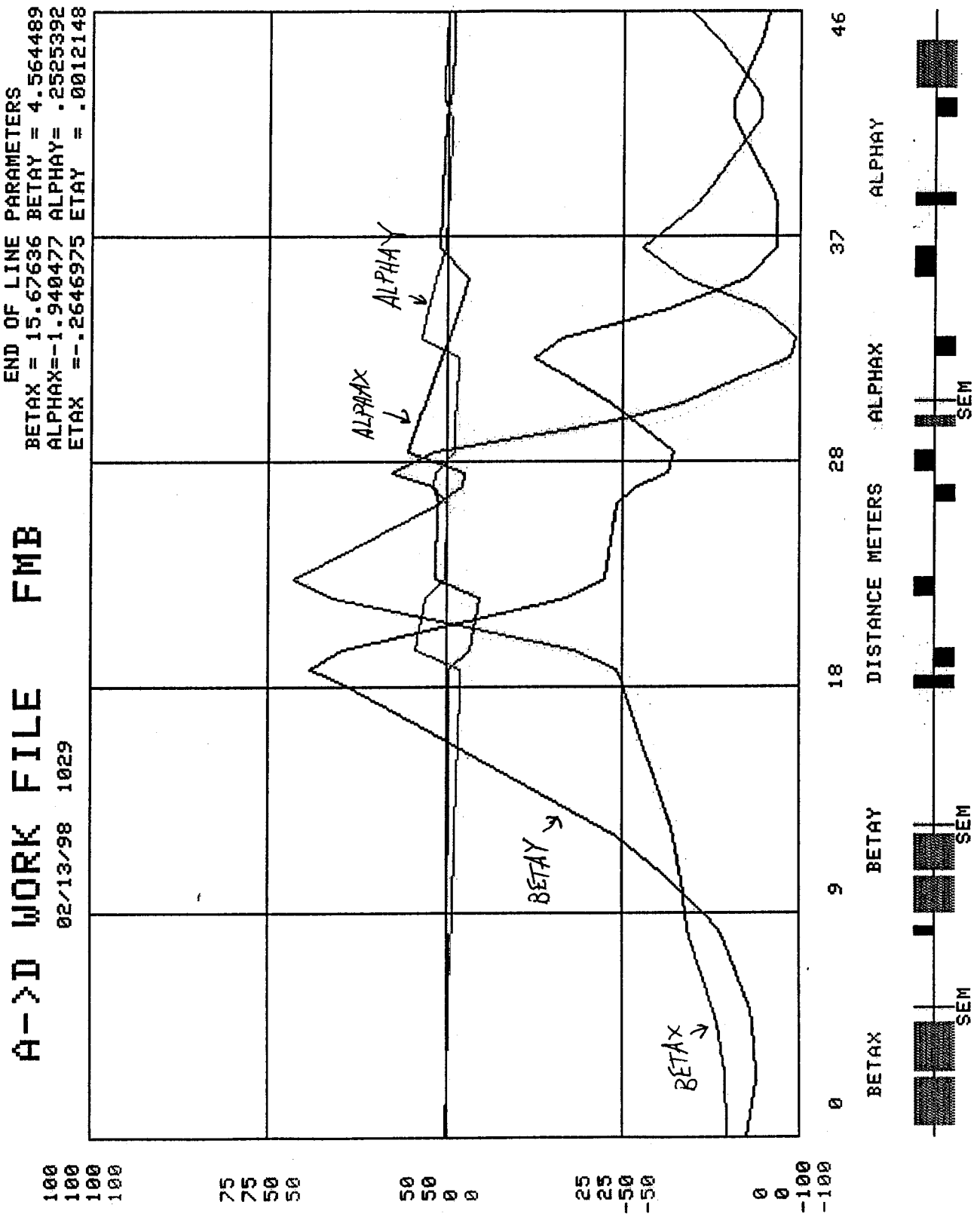
A->D WORK FILE FMB
02/13/98 1029
END OF LINE PARAMETERS
BETAX = 15.67636 BETAY = 4.564489
ALPHAX=-1.940477 ALPHAY= .2525392
ETAX =-.2646975 ETAY = .0012148
ALPHAY
ALPHAX
BETAY
BETAX
100 100 100 100
75 75 50 50
50 50 0 0
25 25 -50 -50
0 0 -100 -100
0 9 18 28 37 46
DISTANCE METERS
BETAX
SEM
BETAY
SEM
ALPHAX
SEM
ALPHAY

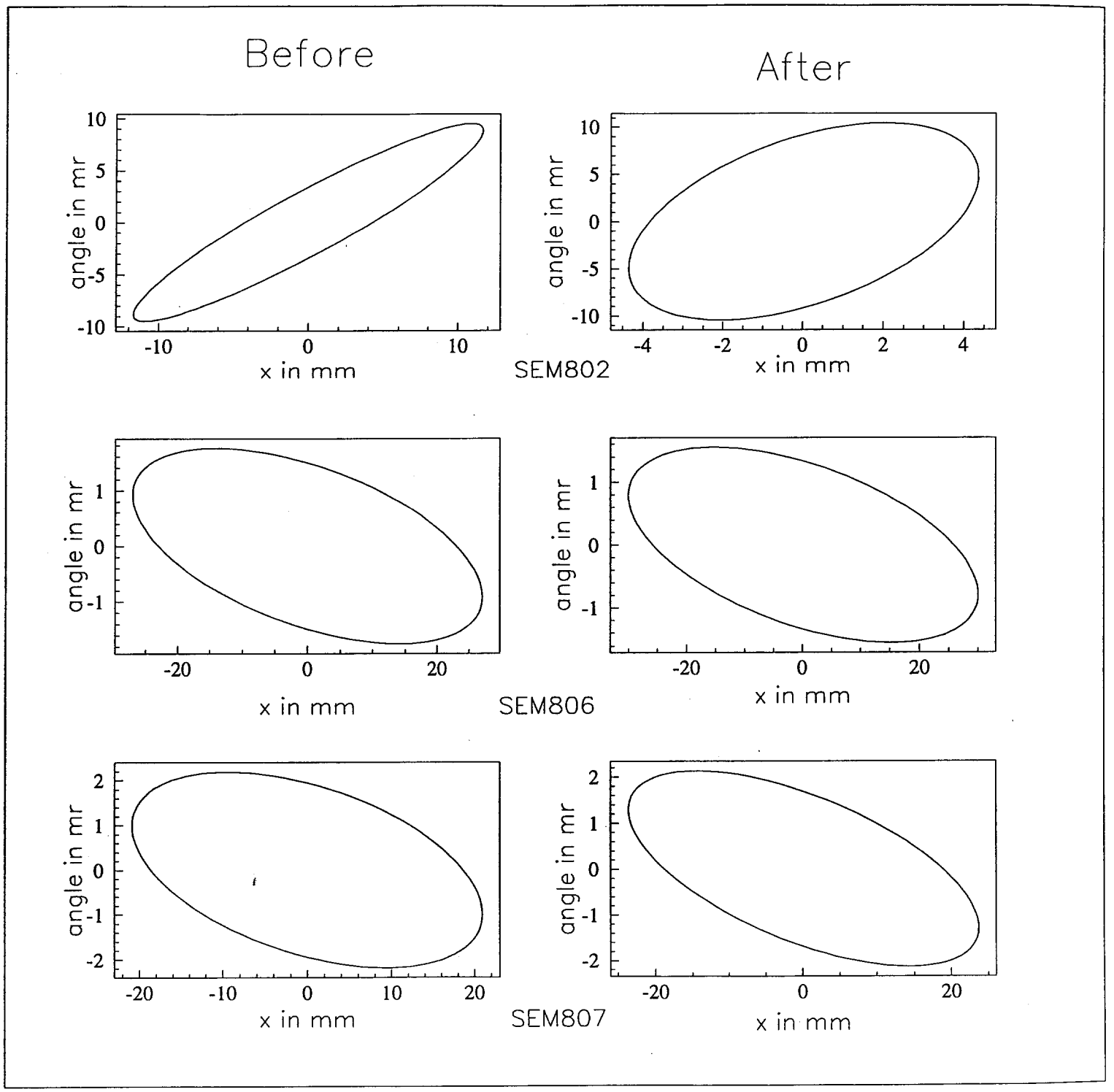
Before
After
angle in mr
x in mm
SEM802
SEM806
SEM807

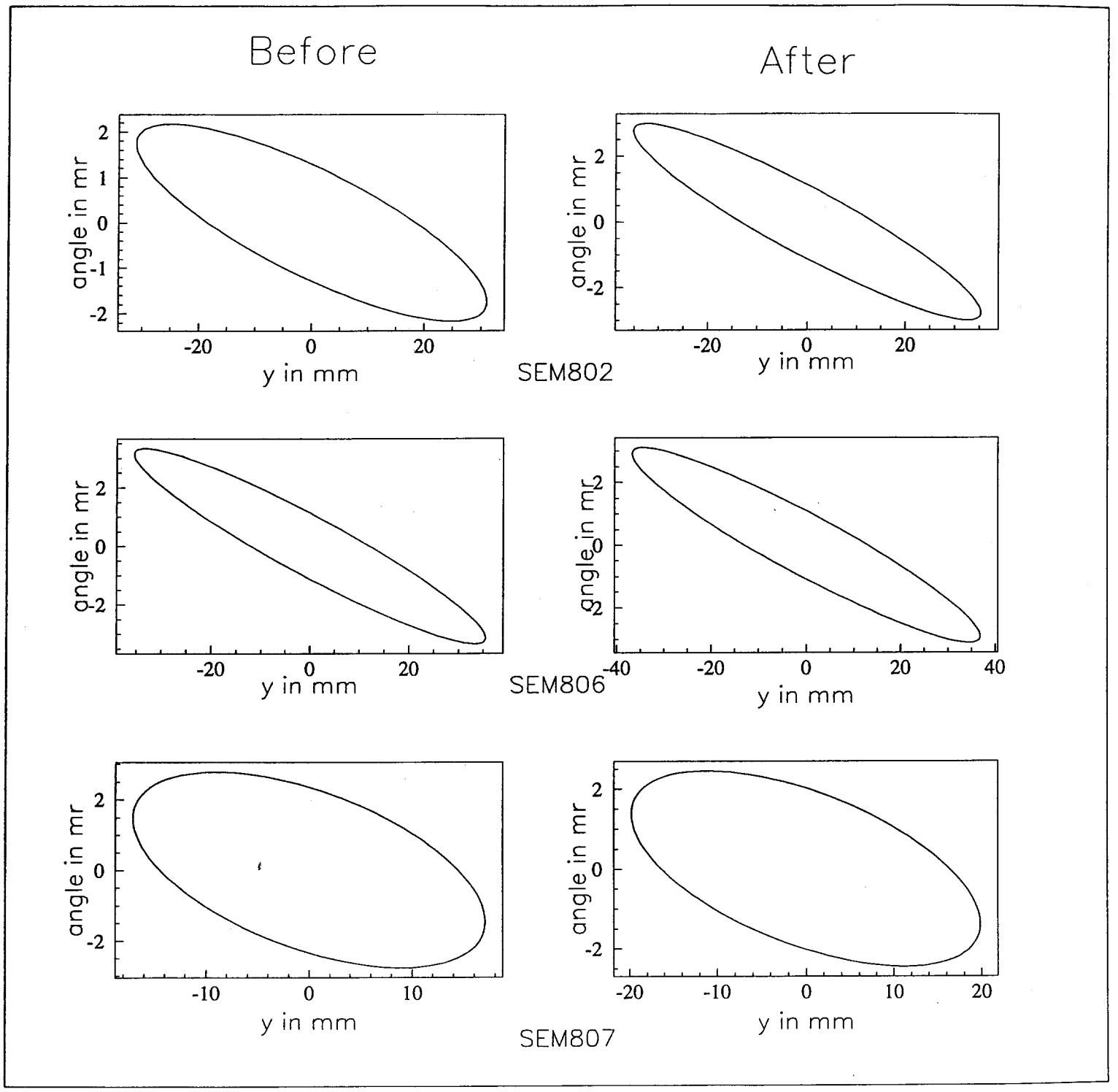
Before
After
angle in mr
y in mm
SEM802
SEM806
SEM807

Old Floor Coordinates

NAME	TYPE	FRD NO	STATION	EASTING	NORTHING	HEIGHT	AZIMUTH	SLOPE	ROLL
D6Q6	QUADRUPOLE		681.702	-6512.568	5943.612	0.001	302 41 50	0 0 1	0 0 0
D6Q6	QUADRUPOLE		714.302	-6540.003	5961.222	0.001	302 41 50	0 0 1	0 0 0
DRIF	DRIFT		714.302	-6539.276	5962.643	0.000	306 58 14	0 0 0	0 0 0
DRIF	DRIFT		914.134	-6698.930	6082.823	0.000	306 58 14	0 0 0	0 0 0
TQ1	QUADRUPOLE		914.134	-6698.930	6082.823	0.000	306 58 14	0 0 0	0 0 0
TQ1	QUADRUPOLE		965.774	-6740.187	6113.880	0.000	306 58 14	0 0 0	0 0 0
DRIF	DRIFT		965.774	-6740.187	6113.880	0.000	306 58 14	0 0 0	0 0 0
DRIF	DRIFT		996.037	-6764.366	6132.081	0.000	306 58 14	0 0 0	0 0 0
V802	DRIFT		996.037	-6764.366	6132.081	0.000	306 58 14	0 0 0	0 0 0
V802	DRIFT		1016.037	-6780.344	6144.108	0.000	306 58 14	0 0 0	0 0 0
DRIF	DRIFT		1016.037	-6780.344	6144.108	0.000	306 58 14	0 0 0	0 0 0
DRIF	DRIFT		1061.478	-6816.649	6171.438	0.000	306 58 14	0 0 0	0 0 0
TQ2	QUADRUPOLE		1061.478	-6816.649	6171.438	0.000	306 58 14	0 0 0	0 0 0
TQ2	QUADRUPOLE		1094.078	-6842.695	6191.043	0.000	306 58 14	0 0 0	0 0 0
DRIF	DRIFT		1094.078	-6842.695	6191.043	0.000	306 58 14	0 0 0	0 0 0
DRIF	DRIFT		1110.903	-6856.137	6201.162	0.000	306 58 14	0 0 0	0 0 0
S802	QUADRUPOLE		1110.903	-6856.137	6201.162	0.000	306 58 14	0 0 0	0 0 0
S802	QUADRUPOLE		1126.653	-6868.720	6210.634	0.000	306 58 14	0 0 0	0 0 0
DRIF	DRIFT		1126.653	-6868.720	6210.634	0.000	306 58 14	0 0 0	0 0 0
DRIF	DRIFT		1225.403	-6947.616	6270.023	0.001	306 58 14	0 0 0	0 0 0
H804	DRIFT		1225.403	-6947.616	6270.023	0.001	306 58 14	0 0 0	0 0 0
H804	DRIFT		1245.403	-6963.594	6282.051	0.001	306 58 14	0 0 0	0 0 0

New Floor Coordinates

NAME	TYPE	FRD NO	STATION	EASTING	NORTHING	HEIGHT	AZIMUTH	SLOPE	ROLL
D6Q6	QUADRUPOLE		681.702	-6512.568	5943.612	0.001	302 41 50	0 0 1	0 0 0
D6Q6	QUADRUPOLE		714.302	-6540.003	5961.222	0.001	302 41 50	0 0 1	0 0 0
DRIF	DRIFT		714.302	-6539.276	5962.643	0.000	306 58 14	0 0 0	0 0 0
DRIF	DRIFT		914.134	-6698.930	6082.823	0.000	306 58 14	0 0 0	0 0 0
V802	DRIFT		914.134	-6698.930	6082.823	0.000	306 58 14	0 0 0	0 0 0
V802	DRIFT		934.134	-6714.908	6094.851	0.000	306 58 14	0 0 0	0 0 0
DRIF	DRIFT		934.134	-6714.908	6094.851	0.000	306 58 14	0 0 0	0 0 0
DRIF	DRIFT		944.134	-6722.897	6100.865	0.000	306 58 14	0 0 0	0 0 0
TQ1	QUADRUPOLE		944.134	-6722.897	6100.865	0.000	306 58 14	0 0 0	0 0 0
TQ1	QUADRUPOLE		995.774	-6764.155	6131.922	0.000	306 58 14	0 0 0	0 0 0
DRIF	DRIFT		995.774	-6764.155	6131.922	0.000	306 58 14	0 0 0	0 0 0
DRIF	DRIFT		1091.478	-6840.618	6189.479	0.000	306 58 14	0 0 0	0 0 0
TQ2	QUADRUPOLE		1091.478	-6840.618	6189.479	0.000	306 58 14	0 0 0	0 0 0
TQ2	QUADRUPOLE		1124.078	-6866.663	6209.084	0.000	306 58 14	0 0 0	0 0 0
DRIF	DRIFT		1124.078	-6866.663	6209.084	0.000	306 58 14	0 0 0	0 0 0
DRIF	DRIFT		1140.903	-6880.105	6219.204	0.000	306 58 14	0 0 0	0 0 0
S802	QUADRUPOLE		1140.903	-6880.105	6219.204	0.000	306 58 14	0 0 0	0 0 0
S802	QUADRUPOLE		1156.653	-6892.688	6228.676	0.000	306 58 14	0 0 0	0 0 0
DRIF	DRIFT		1156.653	-6892.688	6228.676	0.000	306 58 14	0 0 0	0 0 0
DRIF	DRIFT		1225.403	-6947.616	6270.023	0.001	306 58 14	0 0 0	0 0 0
H804	DRIFT		1225.403	-6947.616	6270.023	0.001	306 58 14	0 0 0	0 0 0
H804	DRIFT		1245.403	-6963.594	6282.051	0.001	306 58 14	0 0 0	0 0 0