MEASUREMENT AND REDUCTION OF QUADRUPOLE INJECTION OSCILLATIONS IN THE FERMILAB ANTIPROTON ACCUMULATOR*

F. M. Bieniosek and K. Fullett
Fermilab, P.O. Box 500, Batavia, IL 60510 USA

Abstract

We have utilized a quadrupole pickup[1] in the Fermilab Antiproton Accumulator to reduce quadrupole injection oscillations of 8.9-GeV reverse protons injected from the Main Ring onto the Accumulator extraction orbit. Quadrupole oscillations of the injected beam at $(2q-1)f_0$ due to lattice-function mismatch between the beam transfer line and the Accumulator were measured by the pickup. Minimization was accomplished by varying the strength of quadrupoles in the beamline. Comparison of the quadrupole oscillation data with a beamline model allowed empirical estimation of the matching lattice functions of the line.

INTRODUCTION

The beamline (AP1/AP3) for transfer of antiprotons from the Accumulator to the Main Ring for high-energy physics research consists of an extraction line (AP3) which transports the antiprotons toward the Main Ring beyond the antiproton production target, and the AP1 line, which is also used for delivering 120-GeV protons from the Main Ring to the production target. The complete line is 490 m long and contains 39 quadrupoles. Good betatron matching is important for conserving the emittance of the antiproton beam. Because of the length of the line, uncertainties in magnetic optics of the transfer line and of the periodic lattice functions of the two rings, it is helpful to measure empirically betatron matching of the transfer line. Reverse-injected proton beams are used in the measurements because of the scarcity of antiprotons.

APPARATUS

The quadrupole pickup is located in the Accumulator. The pickup (Figure 1) is approximately one meter in length with a 4 cm aperture. In the measurements (Figure 2) four preamps are connected to the quadrupole pickup, one for each pickup plate. The output of each preamp is connected to a differential line receiver in the AP10 service building. The line receivers are connected to post signal processing electronics that filters and performs the appropriate differences and sums to arrive at a sum, vertical, horizontal, and quadrupole signal. Eight bunches of 8 GeV reverse protons bunched at 53MHz were injected from the Main Ring through the AP1/AP3 beamline into the Accumulator. The oscilloscopes were triggered at the time of injection of the beam. Since the signals from the injected beam decay at a characteristic time scale of 1 ms or less, a discrete Fourier transform was performed on the first 1-ms of data. When the measurements were taken with a stack of antiprotons present on the core orbit, care was taken to increase the emittance of the stack and to adjust the chromaticity to reduce the intensity and move the frequency of

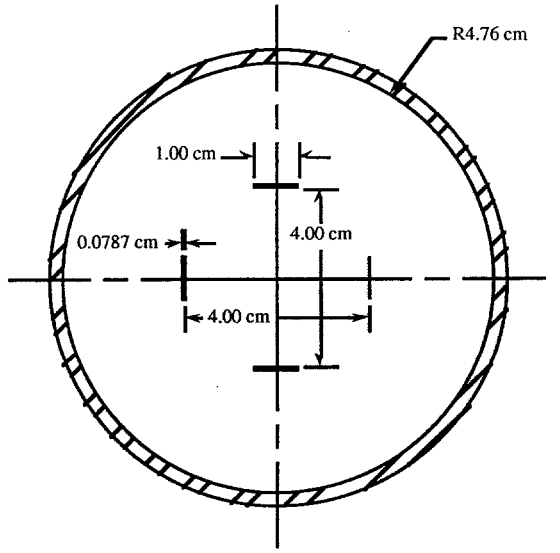

Figure 1. Mechanical arrangement of the quadrupole pickup.

signals due to the stack away from those due to the injected protons. Calibrations were carried out by measuring the output of the pickup as a function of induced dipole injection oscillations of known amplitude. Maintaining dipole injection oscillation amplitude below 1 mm ensures that these oscillations do not significantly affect the quadrupole signal.

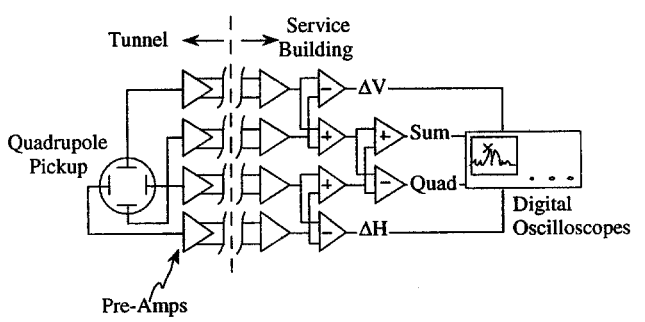

Figure 2. System electronics.

The response of the pickup to a quadrupole oscillation in position of a beam particle is

$$V(x,y,t) = Z \cdot (x^2 - y^2) \cdot i_b(t) \qquad (1)$$

where $x(t)$ and $y(t)$ are the beam position, $i_b(t)$ is the beam amplitude at the pickup, and Z is the gain of the pickup for a quadrupole mode signal. For a particle undergoing horizontal and vertical betatron oscillations $\sqrt{\varepsilon_x \beta_x}\cos(q_x \omega_0 t)$ and

$\sqrt{\varepsilon_y \beta_y}\cos(q_x \omega_0 t)$ about a closed orbit, with horizontal and vertical tunes q_x and q_y, the quadrupole response becomes

$$V = Z\frac{e\omega_0}{4\pi}\cdot$$
$$\sum_{n=1}^{\infty}\left\{\varepsilon_x\beta_x\cos\left[(n\pm 2q_x)\omega_0 t+\phi_x\right]+\varepsilon_y\beta_y\cos\left[(n\pm 2q_y)\omega_0 t+\phi_y\right]\right\} \quad (2)$$

where β_x and β_y are the amplitude functions at the pickup, ε_x and ε_y correspond to the horizontal and vertical emittances enclosed by the orbit, ϕ_x and ϕ_y are arbitrary phases, and the summation is over all frequencies n. Pairs of quadrupole signals appear at the frequencies $n\pm 2q_x$ and $n\pm 2q_y$. The response V for an injected beam is the sum of the contributions of all the particles. Bunching the particles in time results in a coherent quadrupole signal. A beam injected with a lattice-function mismatch undergoes additional coherent quadrupole injection oscillations. This is the signal component to be minimized. The amplitude of this oscillation is related to the emittance growth approximately by [2] $\Delta\beta/\beta \approx \sqrt{2(F-1)}$ where

$$F = \tfrac{1}{2}(\beta\gamma_0 + \beta_0\gamma - 2\alpha\alpha_0) \quad (3)$$

Here the unsubscripted Courant-Snyder parameters are those delivered by the beamline to the ring, and the subscripted parameters are the periodic lattice functions of the ring at the end of the beamline. The function F represents the relative emittance growth of the injected beam $\varepsilon/\varepsilon_0$ if the mismatch is not too large.

MEASUREMENTS

The measurements were made at the 2q-1 lines (about 140 kHz). Three lines were observed, corresponding to q_x, q_y, and a third line, labelled q_{xy}, possibly an artifact of the strong coupling on the extraction orbit. Attempts were made to reduce the coupling by use of a sextupole in the Accumulator, but the coupling could not be completely eliminated. Minimization of the quadrupole signal was accomplished by minimizing the quadrature sum of the three oscillations. By adjusting the current on a series of quadrupoles in the beamline, it was initially possible to reduce the quadrupole signal by about 40%. Results of a typical quadrupole magnet scan are shown in Figure 3. This magnet (D:Q907) was initially set at 90.7 A; the quadrupole signal was minimized at 83 A. The overall quadrupole amplitude is calibrated in terms of the amplitude of the dipole injection oscillation that yields an equivalent signal. A rough calculation shows that the residual signal is comparable to that expected for the emittance of the beam delivered by the Main Ring (10-15 pi-mm-mrad). For example, a 5.5-mm effective oscillation amplitude apportuned equally to both planes corresponds to an oscillation in each plane of 3.9-mm. This leads to an estimate for the

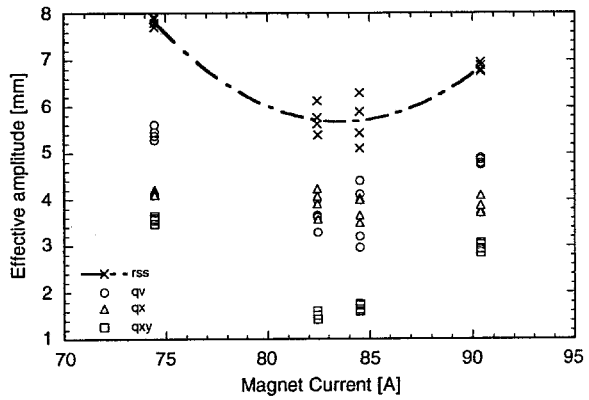

Figure 3. Effect on quadrupole signals of changing current in quadrupole Q907. The amplitudes of the three peaks are indicated. RSS is the quadrature sum of the amplitudes of the three peaks.

normalized 95% emittance of 15-pi-mm-mrad, based on the expression[3]

$$\varepsilon = 6\gamma\frac{\pi}{2}\frac{\Delta x^2 + (\beta\Delta x' + \alpha\Delta x)^2}{\beta} \quad (4)$$

The calculation utilizes the fact that the quadrupole pickup is calibrated to deflections at beam position monitors, at which the lattice functions are $\beta\approx 30$ m, $\alpha\approx 0$. The implication is that the quadrupole signal due to mismatch was reduced to negligible levels, which is supported by the fact that no further improvement could be made by varying other quadrupoles in the beamline. Subsequent measurements and adjustments have been required to retune the line after modifications to improve the dispersion match. A plot of the Fourier transform of the quadrupole signal before and after a series of adjustments to reduce the signal is shown in Figure 4. It shows a reduction

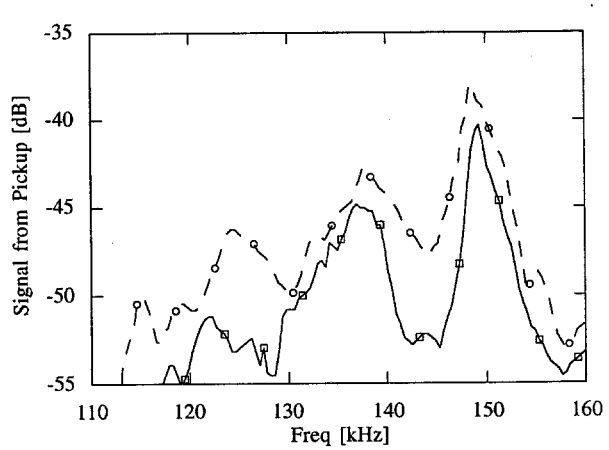

Figure 4. Quadrupole signals before (dashed), and after (solid) a typical tuning session.

of several dB in the signal over the entire range of the quadrupole frequency. The horizontal and vertical tunes of the injected beam, as measured by the dipole Schottky pickups, indicate $1\text{-}2q_x$ = 133 kHz, and $1\text{-}2q_y$ = 148 kHz. Thus the two large peaks in the profile are closely identified with the horizontal and vertical tunes.

A quantitative comparison of the quadrupole oscillation data with a beamline model was performed by utilizing the empirical matching conditions. In most cases the predicted effect of a magnet was predominantly in a single plane. For these cases a plot was made of the lattice functions α and β calculated by a beamline model delivered at the Accumulator end of the beamline for the conditions under which the effective oscillation amplitude derived from the quadrupole signal was 10% greater than the minimum level (points of figures 5 and 6). The input parameters to the model were the lattice functions of the Main Ring as determined by a synch model. The result was then compared to the synch model predictions for the periodic lattice functions of the Accumulator at the end of the line. Plotted are the ellipses for which the function F=1.1, (Equation 3) representing a theoretical 10% emittance growth due to injection mismatch.

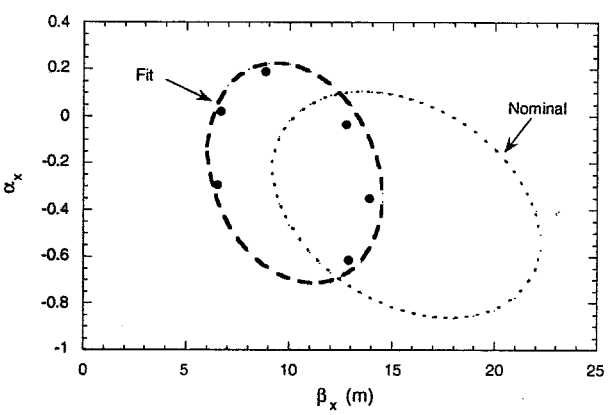

Figure 5. Locus of points for a horizontal emittance growth of 10% due to mismatch.

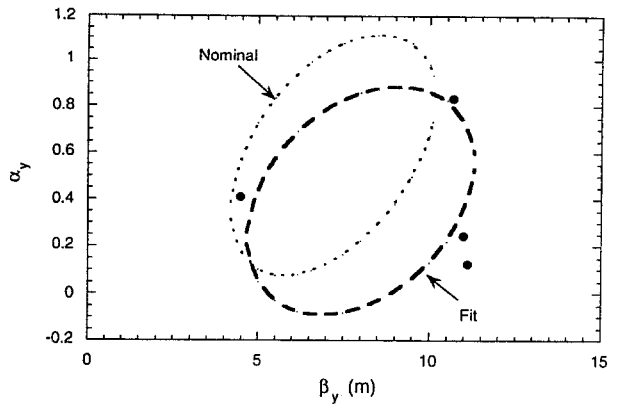

Figure 6. Locus of points for a vertical emittance growth of 10% due to mismatch.

Calculations for β_{x0}=14.3, α_{x0}=-.35 and β_{y0}=6.5, α_{y0}=.54 from the nominal accumulator model (dots) shows a disagreement with the data. A fit to the data (dashes) is also shown, again for F=1.1, with the modified parameters β'_{x0} =9.3, α'_{x0}=-.22 and β'_{y0}=7.3, α'_{y0}=.36. The disagreement between the nominal ellipse and the fit ellipse reveals residual errors in modeling the lattices of the transfer line and the two rings. The precise source of the disagreement is under investigation.

---

*Operated by the Universities Research Association Inc., under contract with the U.S. Department of Energy.

[1] V. Chohan. F. Pederson. S. van der Meer, D.J. Williams, Proc. 1990 European Particle Accelerator Conference, Nice, p. 320.

[2] M. Syphers and T. Sen, Notes on Amplitude Function Mismatch, SSCL-604 (1992).

[3] D. A. Edwards and M. J. Syphers, An Introduction to the Physics of High Energy Accelerators, Wiley, 1993.