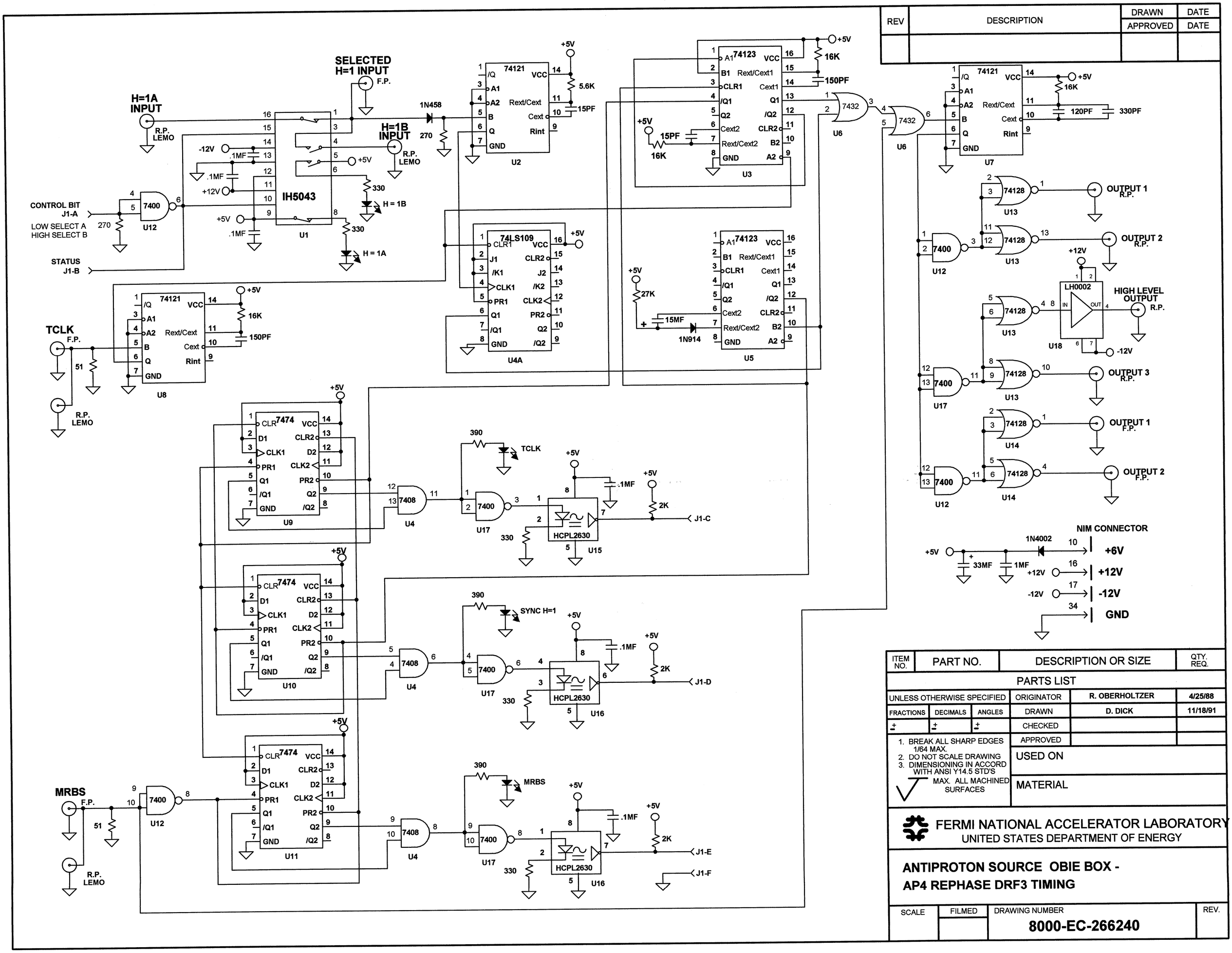

REV	DESCRIPTION	DRAWN	DATE
		APPROVED	DATE

ITEM NO.	PART NO.	DESCRIPTION OR SIZE	QTY. REQ.
PARTS LIST			

UNLESS OTHERWISE SPECIFIED			ORIGINATOR	R. OBERHOLTZER	4/25/88
FRACTIONS	DECIMALS	ANGLES	DRAWN	D. DICK	11/18/91
±	±	±	CHECKED		
			APPROVED		

1. BREAK ALL SHARP EDGES 1/64 MAX.
2. DO NOT SCALE DRAWING
3. DIMENSIONING IN ACCORD WITH ANSI Y14.5 STD'S

MAX. ALL MACHINED SURFACES

USED ON

MATERIAL

FERMI NATIONAL ACCELERATOR LABORATORY
UNITED STATES DEPARTMENT OF ENERGY

ANTIPROTON SOURCE OBIE BOX - AP4 REPHASE DRF3 TIMING

SCALE	FILMED	DRAWING NUMBER	REV.
		8000-EC-266240	