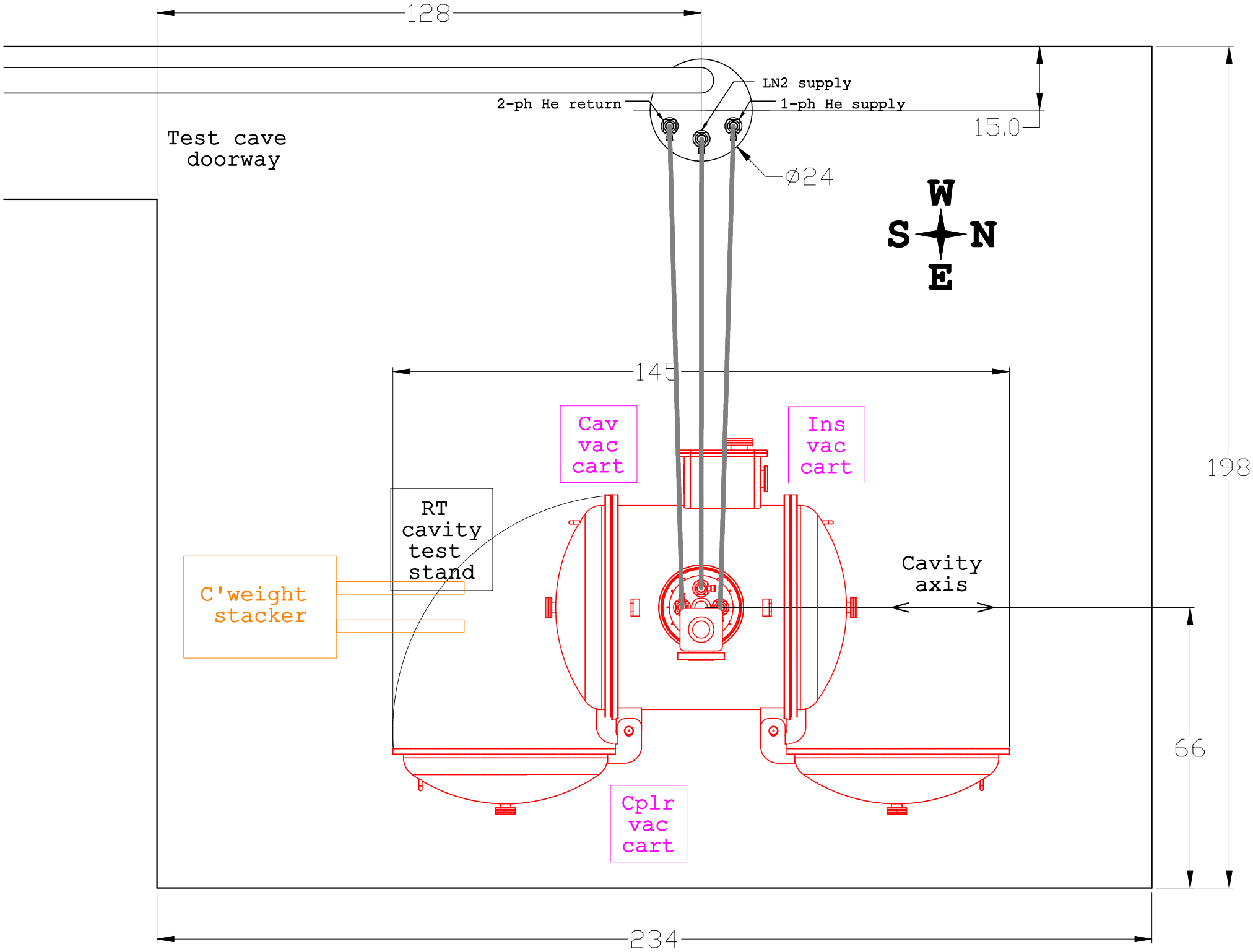
128
LN2 supply
2-ph He return
1-ph He supply
15.0
Test cave
doorway
ø24
W
S
N
E
145
Cav
vac
cart
Ins
vac
cart
198
RT
cavity
test
stand
C'weight
stacker
Cavity
axis
66
Cplr
vac
cart
234