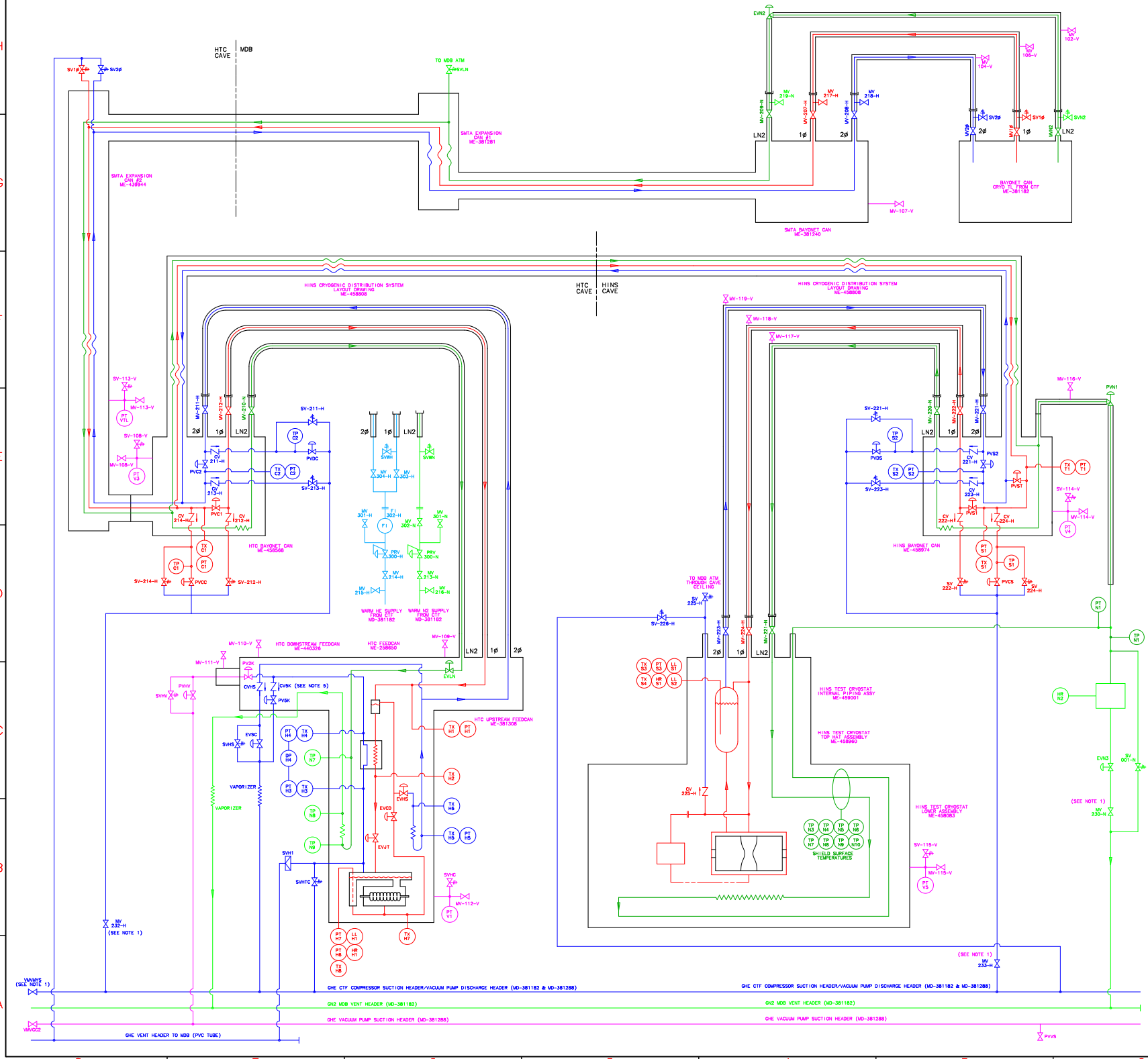

REV	DESCRIPTION	DRAWN / APPROVED	DATE / DATE
A	SVHTC RELIEF PRESSURE CHANGED TO 5 PSIG. SVHS RELIEF PRESSURE CHANGED TO 10 PSIG. CAVITY AND PRESSURE VESSEL ITEMS ADDED. ADDED EVH1 AND EVH2. ADDED VACUUM BREAK AND MV-111-V.	B. DEGRAFF	05/15/07
B	REDRAWN TO INCLUDE HINS CRYOSTAT AND DISTRIBUTION SYSTEM	M. WHITE	03/10/09
C	FIXED DWG TO INCLUDE PVST, PTT1,AND TXT1. REDREW N2 VENT SYSTEM ON HINS BAYONET CAN. REMOVED HINS TEST CRYOSTAT.	M. WHITE	06/01/09
D			

NOTES:

1. VALVES ARE CONFIGURATION LOCKED IN OPEN POSITION DURING NORMAL OPERATION. ADDP-CR-2728 MUST BE FOLLOWED BEFORE PRESSURIZING OR COOLING DOWN SYSTEM.
2. ARROWS FOR SOLENOID VALVES INDICATE NON-ENERGIZED STATE OR SHELF POSITION.
3. ALL SYMBOLS CONFORM TO ANSI/ISA S5.1-1984(R1992) STANDARDS UNLESS OTHERWISE SPECIFIED.
4. LINE DEFINITIONS:
   - HIGH PRESSURE GHe LINES
   - LOW PRESSURE GHe LINES
   - VACUUM LINES
   - LHe LINES
   - GN2 LINES
   - LN2 LINES
   - BOUNDRY LINES
5. CHECK VALVE POPPET HAS A SMALL HOLE TO PREVENT TRAPPED VOLUME

CONTROL VALVES

TAG	DESCRIPTION	Cv	BULLET
PVC1	HTC 1ø SUPPLY	4.00	50:1 EQUAL %
PVC2	HTC 2ø RETURN	4.00	50:1 EQUAL %
PVST	TRANSFER LINE J-T	0.10	50:1 EQUAL %
PVS1	HINS 1ø SUPPLY	0.12	50:1 EQUAL %
PVS2	HINS 2ø RETURN	4.00	50:1 EQUAL %
PVCC	HTC 1ø COOLDOWN	0.32	100:1 EQUAL %
PVDC	HTC 2ø COOLDOWN	0.32	100:1 EQUAL %
PVCS	HINS 1ø COOLDOWN	0.32	100:1 EQUAL %
PVDS	HINS 2ø COOLDOWN	0.32	100:1 EQUAL %
EVN2	SMTF TL LN2 SUPPLY	3.00	100:1 EQUAL %
EVHS	HTC 5K HEAT SHIELD	0.32	100:1 EQUAL %
EVCD	HTC COOLDOWN	0.32	100:1 EQUAL %
EVJT	HTC J-T	0.32	100:1 EQUAL %
EVLN	HTC LN2 FLOW	0.05	100:1 EQUAL %
PV5K	HTC SUCTION HEADER	-	OPEN/CLOSE
PV2K	HTC VACUUM HEADER	11.0	EQUAL %
EVSC	HTC 5K HEAT SHIELD	3.00	100:1 EQUAL %
PVN1	HINS TL LN2 CD	-	OPEN/CLOSE
EVN3	HINS CRYOSTAT LN2	6.6	-
PVHV	HTC VACUUM HEADER	-	OPEN/CLOSE

UNLESS OTHERWISE SPECIFIED	ORIGINATOR	B.DEGRAFF	08-MAR-2006
	DRAWN	B.DEGRAFF	08-MAR-2006
± ± ±	CHECKED	B.SOYARS	19-FEB-2007
1. BREAK ALL SHARP EDGES 1MM	APPROVED	A.KLEBANER	16-FEB-2007
2. DO NOT SCALE DRAWING. 3. DIMENSIONS BASED UPON ISO, ITU SERIES. 4. ERX. ALL MACH. SURFACES	USED ON		
5. DRAWING UNITS: U.S. INCH	MATERIAL		

FERMI NATIONAL ACCELERATOR LABORATORY
UNITED STATES DEPARTMENT OF ENERGY

SMTF - CRYOGENICS
MDB TEST CAVES
TRANSFERLINE FEEDBOX SCHEMATIC

SCALE	DRAWING NUMBER	SHEET	REV
--	5520.000-ME-440517	1 OF 1	D

CREATED WITH : Ideas12NXSeries GROUP: ACCELERATOR CRYOGENICS