REV	DESCRIPTION	DRAWN	DATE
		APPROVED	DATE

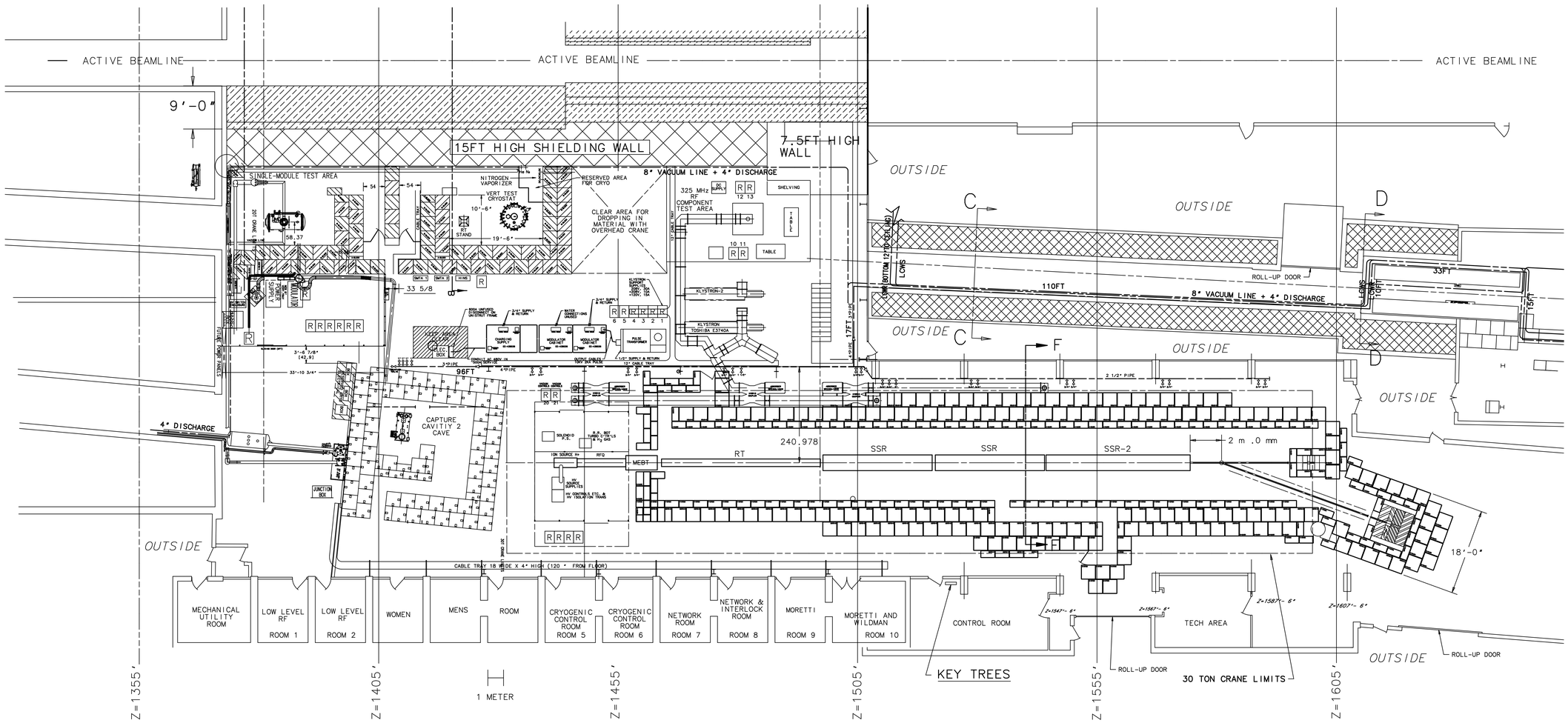

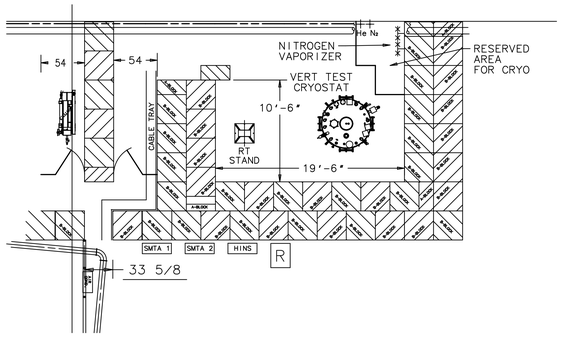

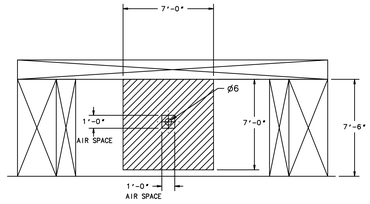

SECTION G-G

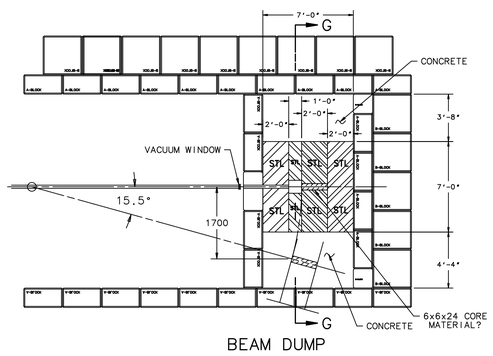

BEAM DUMP

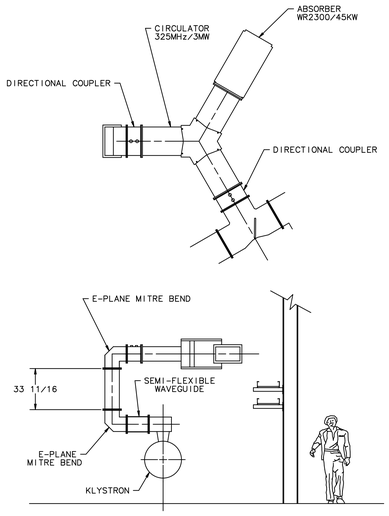

SECTION B-B

NORTH

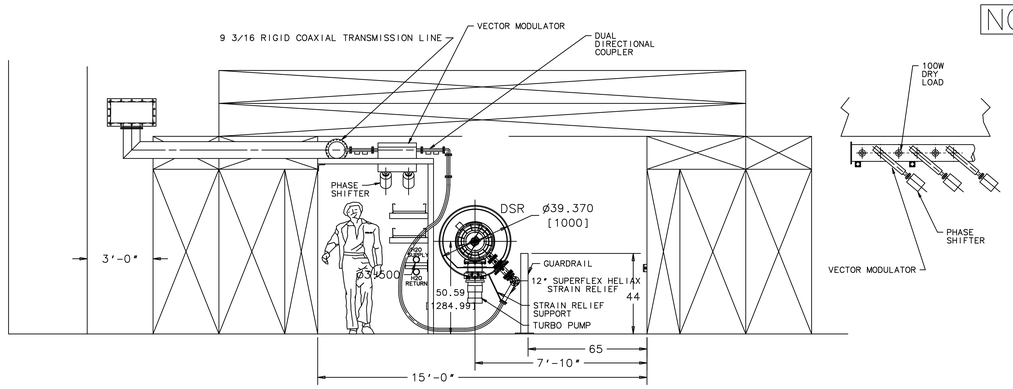

SECTION F-F

SCALE 3/8"=1'-0

SEPT 6, 2007

UNLESS OTHERWISE SPECIFIED	ORIGINATOR	B.WEBBER	06-SEP-2007
	DRAWN	B.GLOOR	24-APR-2008
± ± ±	CHECKED		
1. BREAK ALL SHARP EDGES MAX.	APPROVED		
2. DO NOT SCALE DRAWING. 3. DIMENSIONS BASED UPON ASME Y14.5M-1994 4. MAX. ALL MACH. SURFACES	USED ON		
5. DRAWING UNITS: U.S. INCH	MATERIAL		

FERMI NATIONAL ACCELERATOR LABORATORY
UNITED STATES DEPARTMENT OF ENERGY

HINS - INFRASTRUCTURE ENCLOSURES AND INSTALLATION CAGE AND CAVE

SCALE	DRAWING NUMBER	SHEET	REV
AS NOTED	5520.000-ME-458709	1 OF 1	

CREATED WITH : Ideas12NXSeries GROUP: ACCELERATOR MECH. SUPPT.