NOTES:
1) AMPLIFIER REGULATOR BUS HAS ON/OFF CONTROL, HIGH/LOW VOLTAGE STATUS, AND HIGH/LOW CURRENT STATUS.
2) TROMBONE POWER BUS HAS MOTOR CONTROL. READBACK BUS HAS LIMIT SWITCH AND POSITION STATUS.
3) AMPLIFIER GAINS ARE NOMINAL.
4) ATTENUATORS ARE SMA TYPE, MODEL 292 OB 44a, BY MIDWEST uWAVE.
5) PIN ATTENUATOR BUS CONSISTS OF 8-BIT TTL DRIVER AND 8-BIT TTL READBACK.
6) PIN SWITCH BUS HAS ONE TTL ON/OFF BIT AND ONE TTL READBACK BIT.
7) ALL COMPONENTS ARE ON AN ALUMINUM PLATE MOUNTED VERTICALLY NEXT TO RACK B33R03.
8) BOLD LINES ARE MAIN RF PATHS.
9) BAW DEVICE OVEN CHASSIS IS MOUNTED ON BACKSIDE OF ALUMINUM PLATE. ALL THREE DELAY DEVICES ARE BY TELEDYNE MICROWAVE, MODEL MBE-1133, AND ARE IN THIS ONE CHASSIS.
10) 0.085" COPPER SEMI-RIGID COAX
11) 0.141" COPPER SEMI-RIGID COAX
12) ALL TERMINATIONS ARE 1/2 OR 1 WATT FOR SMA PADS AND 2 WATT FOR TYPE 'N', UNLESS NOTED OTHERWISE.
13) TEMPERATURE CONTROLLER SETTINGS AS FOLLOWS: RATE (RT) @ 00, HEAT GAIN (HG) @ 250, HEAT CYCLING (HC) @ 00, COOLING GAIN (CG) @ 100, COOLING CYCLING (CC) @ 50.

REV.	DESCRIPTION	DRAWN / APPD.	DATE / DATE
F	PIN ATT. LIMIT & DIODE NAMES ADDED	WJM	10/92
G	REPLACED A:SPPA05 AND PHASE SHIFTER PAD CHANGES	WJM	12/92
H	ADDITION OF THE FOUR FILTER CHARACTERISTIC GRAPHS	WJM	5/93
J	CORRECTION OF SCHIFFMAN EQUALIZER GRAPHS	WJM	2/94
K	FLIPPED FILTER 2 (-1 MEV) 180 DEGREE HYBRID	WJM	9/94
L	ADDED 6DB PAD AFTER PIN ATT.	WJM	11/95
M	COMPLETE SYSTEM CHANGE TO 2-4 GHZ, REDRAWN	WJM	11/95
N	AMPS MOVED, PF3 COUPLER ADDED, FILTER, BAW & OTHER CHANGES	WJM	5/04
O	RE-MADE & MOUNTED VERTICALLY, SWITCH NAME CHANGES/ADDITIONS, OVEN RE-MADE	WJM	3/30/06
P	PAD ADDED BEFORE SPAM06, 4-WAY CHANGE TO 2-WAY SPLIT, PIGGYBACK AMP TO SPAM08	WJM	9/7/06
R	ADDED A PIN ATTENUATOR IN LEG2 AND TWO 20DB COUPLERS	WJM	12/18/06
S	ADDED 2T SWITCH A:SP2T03 AFTER FILTER 3	WJM	1/4/07
T	REPLACED FILTER 3 BAW DELAY WITH CRYOGENIC DELAY LINE IN HELIUM DEWAR	WJM	8/3/07

AP30 SERVICE BUILDING

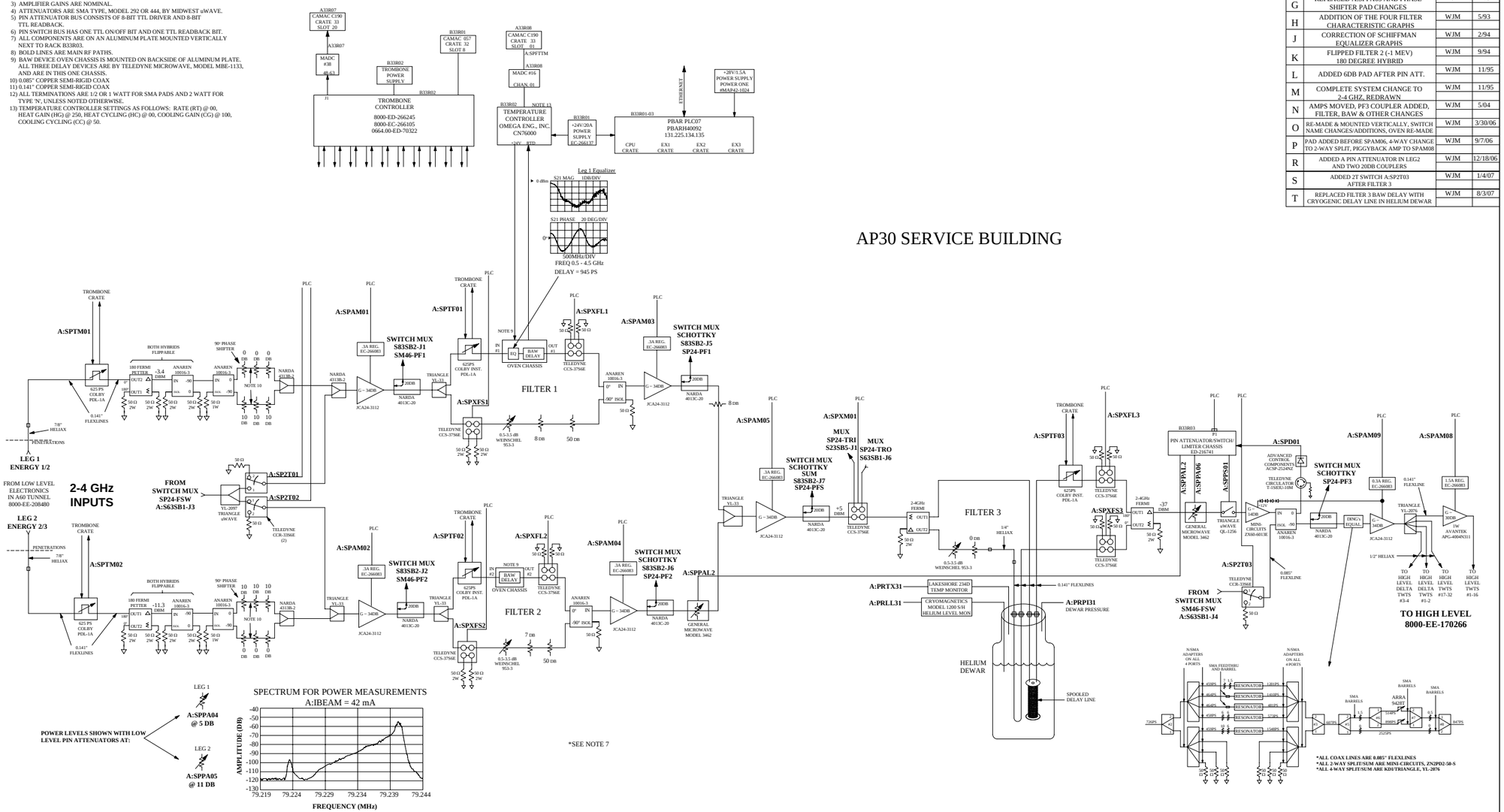

AP30 SERVICE BUILDING

8/3/07

ITEM NO.	PART NO.	DESCRIPTION OR SIZE	QTY. REQ.
PARTS LIST			

UNLESS OTHERWISE SPECIFIED — FRACTIONS ±/- DECIMALS ±/- ANGLES ±/-

1. BREAK ALL SHARP EDGES 1/64 MAX.
2. DO NOT SCALE DRAWING DIMENSIONING IN ACCORD WITH ANSI Y14.5 STD'S

MAX. ALL MACHINED SURFACES

ORIGINATOR	R. J. PASQUINELLI	
DRAWN	WES MUELLER	2/20/92
CHECKED		
APPROVED		
USED ON		
MATERIAL-		

FERMI NATIONAL ACCELERATOR LABORATORY
UNITED STATES DEPARTMENT OF ENERGY

PBAR SOURCE
2-4 GHz STACKTAIL MOMENTUM
MEDIUM LEVEL ELECTRONICS

SCALE	FILMED	DRAWING NUMBER	REV.
		8000 - EE - 170265	T