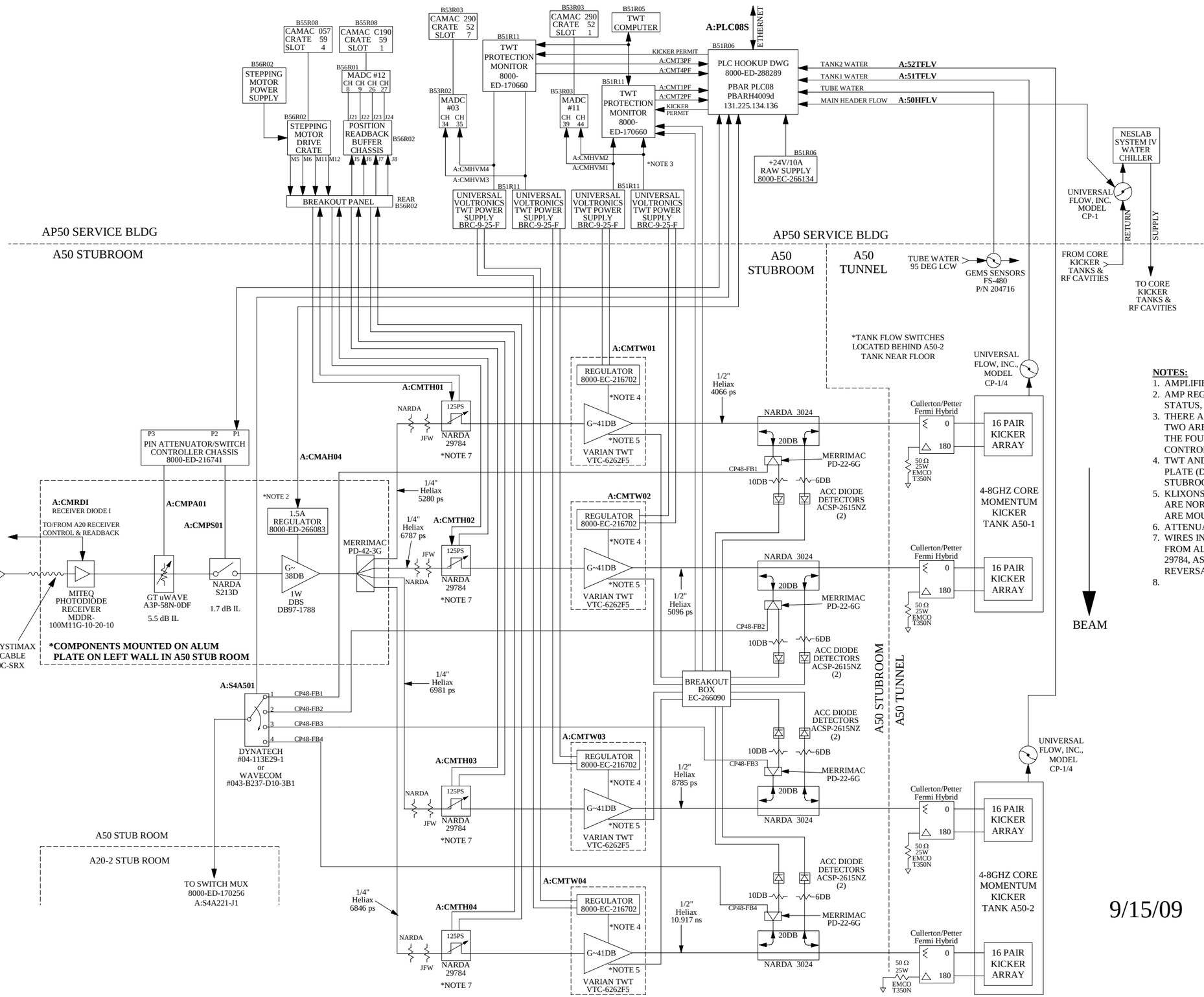

REV.	DESCRIPTION	DRAWN / APPD.	DATE / DATE
B	TWT TIMING	G.A. JOHNSON / WES MUELLER	9/19/91 / 9/24/91
C	TURBINES ADDED IN CHILLED LCW	G.A. JOHNSON / WES MUELLER	7/20/94 / 7/25/94
D	ADDED WATER FLOW MADC CHANNELS AND REDRAWN	WES MUELLER / WES MUELLER	9/11/96 / 9/11/96
E	NAME/CONTROL CHANGES	WES MUELLER / WES MUELLER	8/14/98 /
F	TROMBONES MOVED WITH TWT CHILL PLATE CHANGE	WES MUELLER	7/30/01
G	RE-MADE HI LEVEL PLATE, OPTIC LINK ACROSS RING, TWTS REMOUNTED	WES MUELLER	4/18/06
H	REMOVED DING EQ, PAD, FILTER, & AMP. RENAMED CMAH05 1W AMP TO CMAH04	WES MUELLER	8/15/07
J	ADDED 2nd KICKER TANK W/TWTs & TROMBONES	WES MUELLER	4/23/09
K			

NOTES:

1. AMPLIFIER GAINS ARE NOMINAL.
2. AMP REGULATOR BUS HAS ON/OFF CONTROL, HIGH/LOW VOLTAGE STATUS, AND HIGH/LOW CURRENT STATUS.
3. THERE ARE ACTUALLY 3 CABLES BETWEEN TWT SUPPLY AND THE TPMPM. TWO ARE RG58 FOR HELIX MON., AND REMOTE FAULT. THE FOURTH IS TWO 10C/22GA CABLES TY-RAPPED TOGETHER FOR REMOTE CONTROL AND STATUS.
4. TWT AND REGULATOR ARE MOUNTED ON A WATER COOLED COPPER CHILL PLATE (DWG. #8000-MC-266077) WHICH IS BOLTED TO UNISTRUT ON A50 STUBROOM WALL BEHIND TANK.
5. KLIXONS ARE BY ELMWOODS SENSORS, MODEL #3100-56-87L250. THEY ARE NORMALLY CLOSED SWITCHES SET TO OPEN AT 250°F, +/- 9°F SWITCHES ARE MOUNTED AT OUTPUT END OF TWT.
6. ATTENUATORS ARE TYPE 'N' BY NARDA, MODEL 773, OR JFW 50HF SERIES.
7. WIRES IN TROMBONE READBACK CABLE, TO PINS 7 & 9 ONLY, ARE REVERSED FROM ALL OTHER TROMBONES FOR THE 4-8GHZ NARDA TROMBONES MODEL 29784, AS THEIR LINEAR POT INSIDE IS REVERSED FROM ALL THE OTHERS. REVERSAL IS DONE ON THE TROMBONE END ONLY (TUNNEL SIDE).
8.

9/15/09

ITEM NO.	PART NO.	DESCRIPTION OR SIZE	QTY. REQ.
PARTS LIST			

UNLESS OTHERWISE SPECIFIED			ORIGINATOR	R.J. PASQUINELLI	
FRACTIONS	DECIMALS	ANGLES	DRAWN	WESLEY MUELLER	9/24/96
+/-	+/-	+/-	CHECKED		
1. BREAK ALL SHARP EDGES 1/64 MAX.			APPROVED		
2. DO NOT SCALE DRAWING			USED ON		
3. DIMENSIONING IN ACCORD WITH ANSI Y14.5 STD'S			MATERIAL-		
MAX. ALL MACHINED SURFACES					

FERMI NATIONAL ACCELERATOR LABORATORY
UNITED STATES DEPARTMENT OF ENERGY

ANTI-PROTON SOURCE
CORE MOMENTUM (4-8 GHZ)
HIGH LEVEL ELECTRONICS

SCALE	FILMED	DRAWING NUMBER	REV.
		8000-ED-266132	J