REV.	DESCRIPTION	DRAWN	DATE
		APPD.	DATE

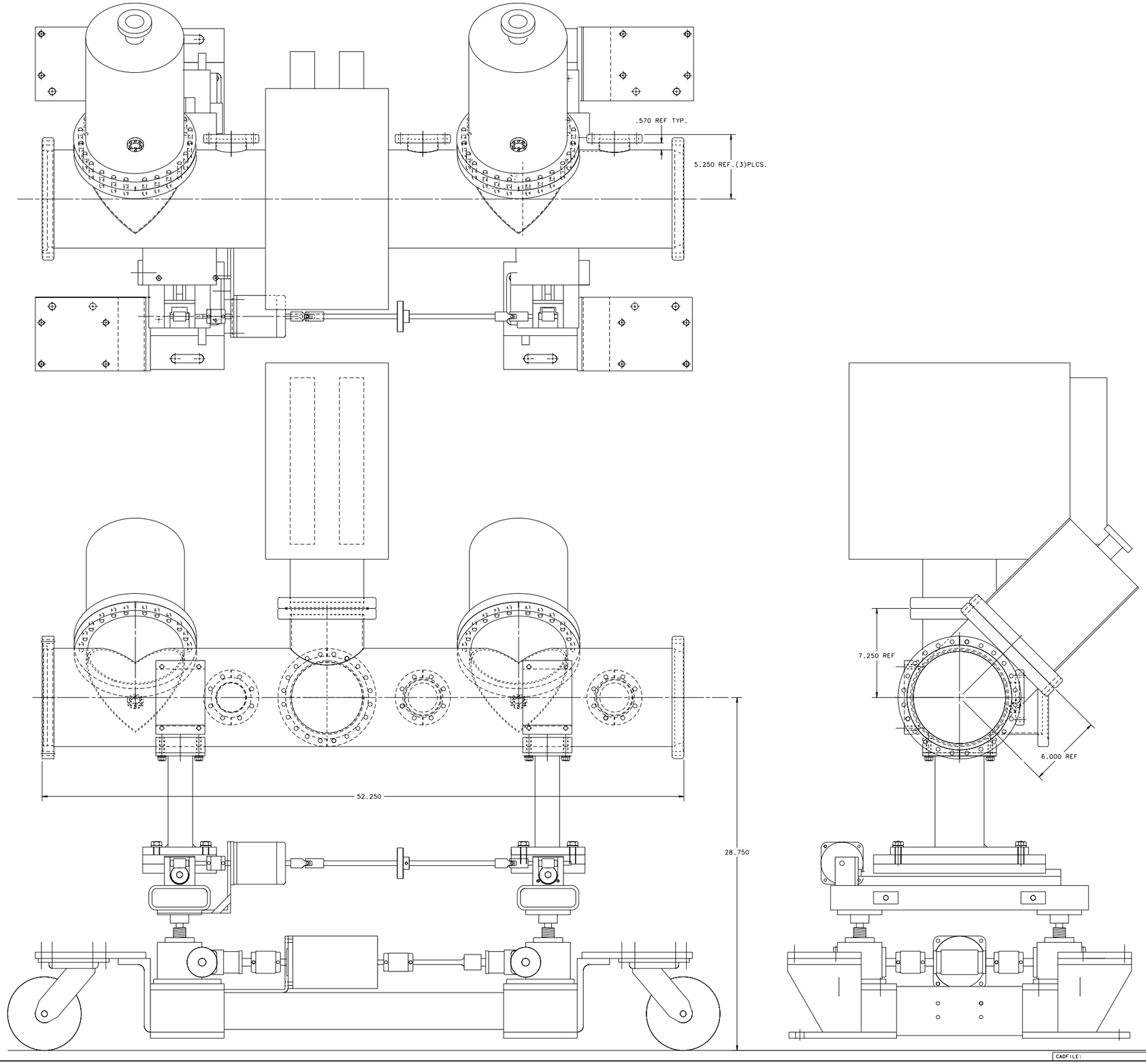

ITEM	PART NO.	DESCRIPTION OR SIZE	QTY.
7			
6			
5			
4			
3			
2			
1	ME-413046	TANK ASSEMBLY	1

PARTS LIST

UNLESS OTHERWISE SPECIFIED			ORIGINATOR	DAVID TINSLEY	11/15/01
DECIMALS	FRACTIONS	ANGLES	DRAWN	K.OBRIEN	01/04/02
±.015	±1/64	±.5°	CHECKED		
1. BREAK ALL SHARP EDGES 1/64 MAX.			APPROVED		
2. DO NOT SCALE DRAWING.			USED ON		
3. DIMENSIONS BASED UPON ANSI Y14.5M-1982					
4. MAX. ALL MACH. SURFACES √			MATERIAL		

FERMI NATIONAL ACCELERATOR LABORATORY
UNITED STATES DEPARTMENT OF ENERGY

PBAR SOURCE
4-8 GHz TRANSVERSE STOCHASTIC COOLING
TANK FINAL WELDMENT

SCALE	FILMED	DRAWING NUMBER	REV.
3/8		8035.000-ME-4130	

CADFILE:

CREATED WITH I-DEAS_V1 | USER NAME: